TOWN OF BROOKFIELD, CONNECTICUT

DEAN AND POCONO ROADS GRAVITY SANITARY SEWER EXTENSION

CONTRACT NO. 2026-01

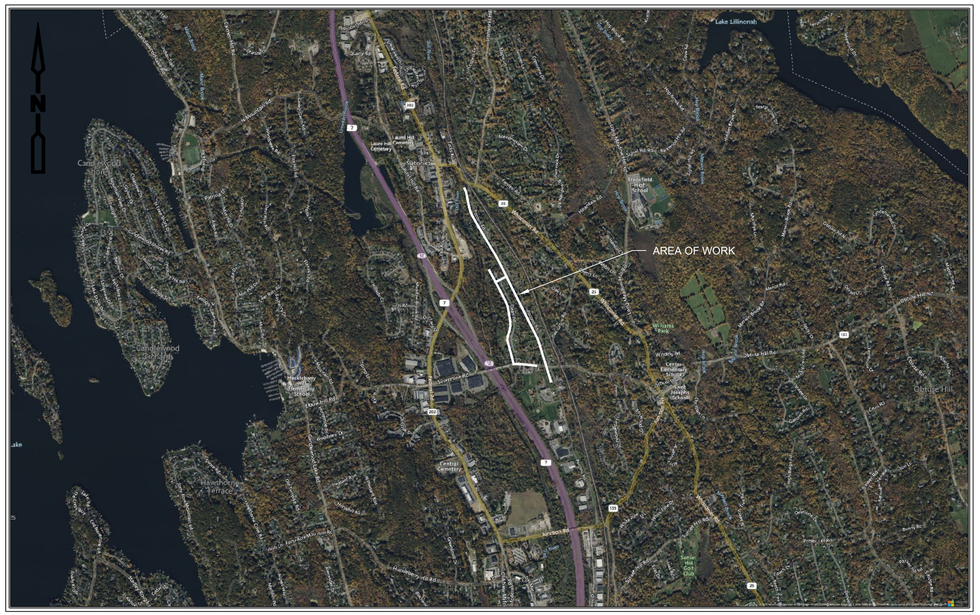

LOCATION PLAN

1" = 2,000'

1,000 0 2,000

BOARD OF SELECTMEN

STEPHEN C. DUNN, FIRST SELECTMAN
ROBERT D. BELDEN, SELECTMAN
KARL HINGER, SELECTMAN

WATER POLLUTION CONTROL AUTHORITY

NELSON MALWITZ, CHAIR
LOUISE TROJANOWSKI–MARCONI, VICE–CHAIR
JAMES MURRAY, TREASURER
LORETTA DONOVAN
MATTHEW WOLK
RYAN BERGERON, ALTERNATE

APRIL 2026

STATE OF CONNECTICUT
KRISTIE GERSLEY WAGNER
No. 24384
LICENSED PROFESSIONAL ENGINEER

Digitally signed by Kristie G Wagner
Date: 2026.04.29 15:12:03-04'00'

SHEET INDEX

SHEET	TITLE
G–1	KEY PLAN
G–2	GENERAL NOTES, LEGEND AND ABBREVIATIONS
C–1	POCONO ROAD PLAN AND PROFILE – I
C–2	POCONO ROAD PLAN AND PROFILE – II
C–3	POCONO ROAD PLAN AND PROFILE – III
C–4	DEAN ROAD PLAN AND PROFILE – I
C–5	DEAN ROAD PLAN AND PROFILE – II
C–6	DEAN ROAD PLAN AND PROFILE – III
C–7	SILVERMINE ROAD PLAN AND PROFILE
C–8	POCONO ROAD PLAN AND PROFILE – IV
C–9	POCONO ROAD PLAN AND PROFILE – V
C–10	POCONO ROAD PLAN AND PROFILE – VI
C–11	DEAN ROAD PLAN AND PROFILE – IV AND PUMP STATION SITE PLAN
CD–1	CIVIL DETAILS I
CD–2	CIVIL DETAILS II
CD–3	CIVIL DETAILS III
CD–4	CIVIL DETAILS IV
TM–1	TRAFFIC MANAGEMENT DETAILS
M–1	DEAN ROAD PUMPING STATION PLAN AND SECTION
S–1	GENERATOR FOUNDATION PLAN, SECTIONS & DETAILS
S–2	SCHEDULE OF SPECIAL INSPECTIONS AND TESTS
E–1	ELECTRICAL GENERAL NOTES
E–2	ELECTRICAL LEGEND
E–3	OVERALL ONE LINE DIAGRAM
E–4	ELECTRICAL STANDARD DETAILS I
E–5	ELECTRICAL STANDARD DETAILS II
I–1	INSTRUMENTATION LEGEND
I–2	PUMPING STATION P&ID
I–3	INSTALLATION DETAILS

CDM Smith

EAST HARTFORD, CONNECTICUT

Water Environment Transportation Energy Facilities

261865–269061

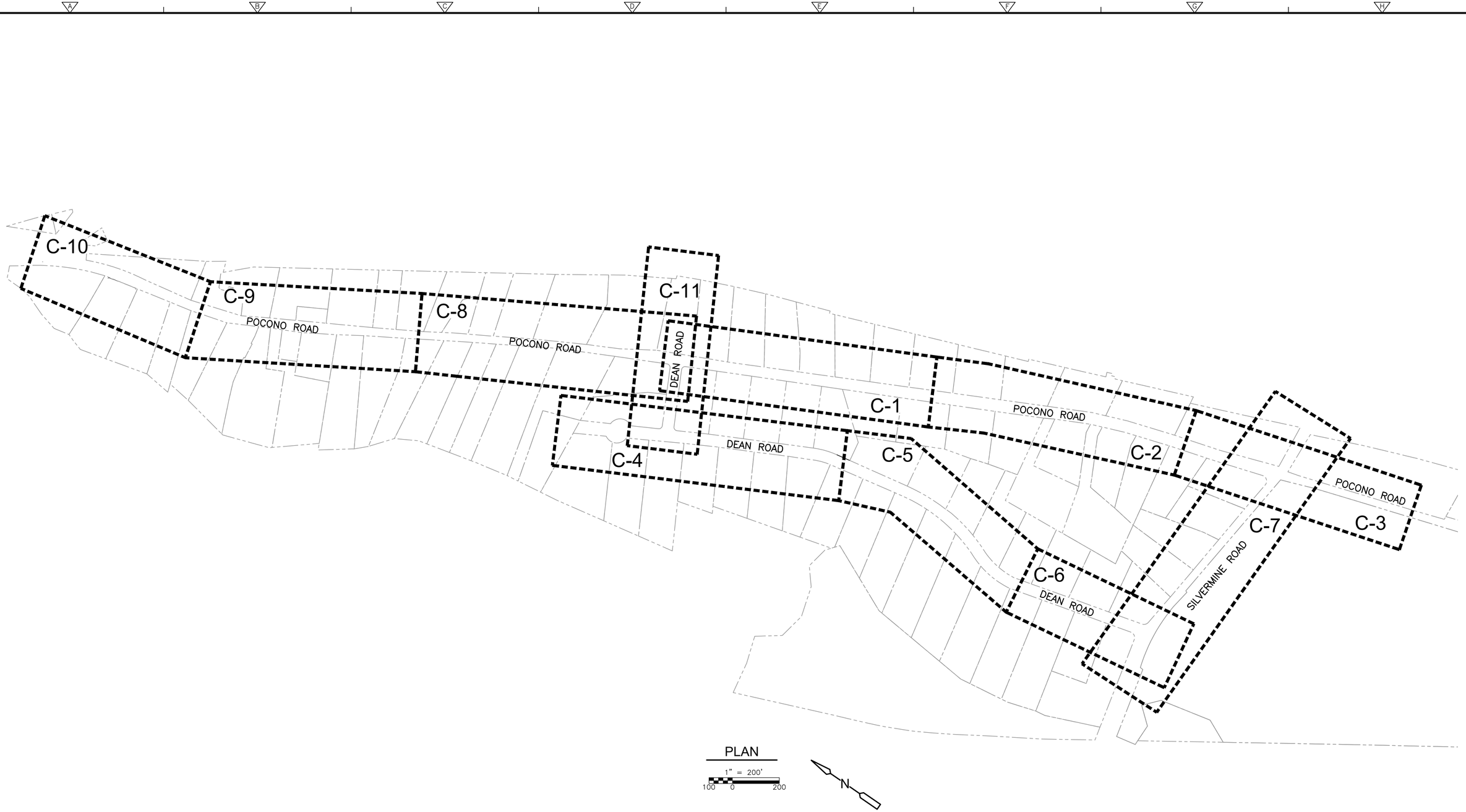

PLAN

1" = 200'

100 0 200

XREFs: [CDMS_2234_CEP000SS] Images: [Wagner Kristie CT PE Stamp]
Last saved by: ENGELSB Time: 4/24/2026 4:37:35 PM
pw://cdmsmith-a032-pw.bentley.com:pw_pl/1261865269061\04 Design Services NM_90%\01 General\10 BIM_CADD\DEAN-POCONO\Gravity\G001KYPL.dwg
© 2026 CDM SMITH ALL RIGHTS RESERVED.
REUSE OF DOCUMENTS: THESE DOCUMENTS AND DESIGNS PROVIDED BY PROFESSIONAL SERVICE, INCORPORATED HEREIN, ARE THE PROPERTY OF CDM SMITH AND ARE NOT TO BE USED, IN WHOLE OR PART, FOR ANY OTHER PROJECT WITHOUT THE WRITTEN AUTHORIZATION OF CDM SMITH.

REV. NO.	DATE	DRWN	CHKD	REMARKS

DESIGNED BY: S. SIDANALE
DRAWN BY: S. SIDANALE
SHEET CHK'D BY: K. WAGNER
CROSS CHK'D BY: D. MURPHY
APPROVED BY: K. WAGNER
DATE: APRIL 2026

CDM Smith
101 East River Drive, Suite 1A
East Hartford, CT 06108
Tel: (860) 529-7615

BROOKFIELD, CONNECTICUT

DEAN AND POCONO ROADS GRAVITY SANITARY SEWER EXTENSION

KEY PLAN

STATE OF CONNECTICUT · KRISTIE BERSLEY WAGNER · No. 24384 · LICENSED PROFESSIONAL ENGINEER

Digitally signed by Kristie G Wagner
Date: 2026.04.29 15:12:20-04'00'

PROJECT NO. 261865-269061
FILE NAME: G001KYPL.DWG

SHEET NO.
G-1

GENERAL NOTES

1. TOPOGRAPHIC SURVEY BASE MAPPING PERFORMED BY PEREIRA ENGINEERING, LLC. BETWEEN SEPTEMBER AND DECEMBER 2024.
2. THIS SURVEY CONFORMS TO HORIZONTAL ACCURACY CLASS A–2, VERTICAL ACCURACY CLASS V–3, AND TOPOGRAPHIC ACCURACY CLASS T–2.
3. THE ELEVATIONS DEPICTED HEREON WERE ESTABLISHED USING GNSS SURVEY METHODS IN SEPTEMBER 2024 AND ARE BASED UPON THE NORTH AMERICAN VERTICAL DATUM OF 1988.
4. NORTH AS DEPICTED HEREON WAS ESTABLISHED USING GNSS SURVEY METHODS IN SEPTEMBER 2024 AND IS BASED UPON THE NORTH AMERICAN DATUM OF 1983 (2011).
5. PORTIONS OF THE PROJECT AREA ARE WITHIN FLOOD ZONES X AND AE AS DEPICTED ON FEMA'S FLOOD INSURANCE RATE MAPS (FIRM) ENTITLED: FAIRFIELD COUNTY, CONNECTICUT (ALL JURISDICTIONS); PANELS 134 AND 132 OF 626; MAP NUMBERS 09001C0132F AND 09001C0134F; EFFECTIVE DATES: JUNE 18, 2010.
6. ANY FEMA FLOODPLAIN AND/OR FLOODWAY INFORMATION DEPICTED HEREON IS APPROXIMATE ONLY AND DOES NOT IN ANY WAY CONSTITUTE AN OPINION OR REPRESENTATION OF ACTUAL FLOODPLAIN AND/OR FLOODWAY INFORMATION BY PEREIRA ENGINEERING, LLC (PE). PE DOES NOT WARRANT THE ACCURACY OF THIS INFORMATION, AND MAKES NO REPRESENTATIONS UPON WHICH THE CLIENT SHOULD RELY IN CONNECTION WITH THE FLOOD ZONE OF THE SUBJECT PARCEL OR ANY FEMA FLOODPLAIN AND/OR FLOODWAY INFORMATION DEPICTED HEREON.
7. UTILITY INFORMATION DEPICTED HEREON IS APPROXIMATE AND IS BASED ON VISIBLE EVIDENCE OF SURFACE AND OVERHEAD STRUCTURE LOCATIONS AND AS COMPILED FROM EXISTING RECORD MAPPING AVAILABLE DURING THE PREPARATION OF THE SURVEY. ALL CONTRACTORS SHOULD CONTACT "CALL BEFORE YOU DIG" AT 1–800–922–4455 FOR VERIFICATION OF UTILITY INFORMATION PRIOR TO START OF ANY WORK.
8. UNLESS OTHERWISE NOTED, THE BOUNDARY INFORMATION SHOWN HEREIN IS BASED ON TOWN OF BROOKFIELD GEOGRAPHIC INFORMATION SYSTEMS INFORMATION.
9. THE LOCATION OF ALL UTILITIES AND SUBSURFACE STRUCTURES WERE TAKEN FROM SURVEY AND RECORDS OF TOWN, CORPORATIONS, AND UTILITIES, ETC., AND ARE CONSIDERED APPROXIMATE, BOTH AS TO SIZE AND LOCATIONS AND ARE INDICATED ON THESE DRAWINGS TO GIVE BIDDERS A GENERAL IDEA OF EXISTING CONDITIONS. IT IS UNDERSTOOD AND AGREED THAT THE CONTRACTOR SHALL NOT RELY UPON THESE DRAWINGS FOR SUCH INFORMATION, BUT SHALL MAKE EXAMINATIONS IN THE FIELD BY VARIOUS AVAILABLE METHODS AND SHALL OBTAIN INFORMATION FROM UTILITY CORPORATIONS AND INDIVIDUALS AS TO THE LOCATION OF ALL SUBSURFACE STRUCTURES, BOTH PUBLIC AND PRIVATE. IT IS NOT WARRANTED THAT ALL PIPES AND UNDERGROUND STRUCTURES ARE SHOWN NOR THAT THEY ARE SHOWN IN THE CORRECT LOCATIONS.
10. EXISTING UTILITY SERVICES TO HOUSES ARE NOT SHOWN. CONTRACTOR SHALL BE RESPONSIBLE FOR INVESTIGATING, LOCATING AND PROVIDING MARKS–OUTS FOR ALL UNDERGROUND UTILITIES, BOTH PUBLIC AND PRIVATE. WORK TO BE PAID FOR UNDER MISCELLANEOUS WORK AND CLEANUP BID ITEM.
11. WATER MAPPING OBTAINED FROM AQUARION WATER COMPANY AND TOWN OF BROOKFIELD RECORDS, CONTRACTOR TO FIELD VERIFY.
12. WATER SERVICES AND MAINS ASSUMED TO BE AT 4.5–FT BELOW GROUND SURFACE.
13. CONTRACTOR TO PROTECT ALL WATER MAINS AND OTHER EXISTING UTILITIES ACCORDING TO SPECIFICATION 312000.
14. CONTRACTOR SHALL PROTECT AGAINST SILTATION OF WETLANDS AS SPECIFIED IN SECTION 312500, EROSION AND SEDIMENTATION CONTROLS AND SHALL COMPLY WITH ALL LOCAL REQUIREMENTS FILTER BAGS SHALL BE PLACED IN ALL CATCH BASINS SUBJECT TO RUNOFF FROM CONSTRUCTION AREAS. CONTRACTOR SHALL NOT COMMENCE ANY WORK UNTIL RECEIVING APPROVAL OF THE CONTRACTOR'S WORK PLAN AND DEWATERING PLAN FROM THE TOWN CONSERVATION COMMISSION.
15. BORINGS AND GEO PROBES WERE DRILLED BY GEOLOGIC–EARTH EXPLORATION IN 2022 AND 2024.
16. BORING LOGS ARE APPENDED TO THE SPECIFICATIONS. BORINGS ARE SHOWN IN PROFILE FOR INFORMATIONAL PURPOSES ONLY AND MAY NOT BE SHOWN AT EXACT LOCATIONS ALONG THE PIPE ALIGNMENT. GROUNDWATER ELEVATIONS SHOWN ON THE LOGS AND PROFILES ARE THOSE ENCOUNTERED AT THE TIME OF DRILLING AND MAY NOT BE REPRESENTATIVE OF ELEVATIONS ENCOUNTERED DURING CONSTRUCTION DUE TO SEASONAL FLUCTUATIONS AND OTHER FACTORS.
17. CONTRACTOR SHALL MINIMIZE CLEARING AND GRUBBING AS MUCH AS POSSIBLE. ALL CROSS COUNTRY AREAS SHALL BE LOAMED AND SEEDED OR SODDED TO THE LIMITS DISTURBED BY CONSTRUCTION UNLESS OTHERWISE NOTED.
18. CONTRACTOR SHALL NOT DISTURB ANY LAND OUTSIDE THE LIMITS OF EASEMENTS AND RIGHTS–OF–WAY. NECESSARY EASEMENTS TO BE PROVIDED BY TOWN OF BROOKFIELD PRIOR TO CONSTRUCTION. CONTRACTOR SHALL NOT ENTER ANY OF THE EASEMENT AREAS UNTIL RECEIVING APPROVAL FROM THE TOWN. CONTRACTOR SHALL EXERCISE EXTREME CAUTION TO PREVENT DAMAGE TO ADJACENT PROPERTY. ALL AREAS DISTURBED DURING CONSTRUCTION SHALL BE RESTORED BY THE CONTRACTOR TO PRE–CONSTRUCTION CONDITION AT NO ADDITIONAL COST TO THE OWNER.
19. NEW SEWER MANHOLE LOCATIONS ARE APPROXIMATE AND MAY BE ALTERED TO MINIMIZE PIPE CUTTING WHEN DIRECTED BY THE ENGINEER.
20. NEW SEWER SERVICE CONNECTIONS SHALL BE INSTALLED SUCH THAT THEY ARE BENEATH EXISTING WATER MAIN AND WATER SERVICE CONNECTIONS. ALL NEW SEWER SERVICES SHALL BE INSTALLED WITH A MINIMUM OF 6–FT OF COVER AND MAXIMUM OF 8–FT OF COVER WHEREVER POSSIBLE. EXACT LOCATIONS OF WYE BRANCHES FOR HOUSE CONNECTIONS TO BE DETERMINED IN THE FIELD. 6–IN SERVICE CONNECTIONS SHALL BE INSTALLED TO THE STREET RIGHT–OF–WAY OR EDGE OF PERMANENT EASEMENT UNLESS OTHERWISE NOTED AND/OR DIRECTED BY THE ENGINEER. CONTRACTOR SHALL FURNISH AND INSTALL WYE BRANCHES, 6–IN PVC SERVICE CONNECTION PIPE AND CHIMNEYS TO BUILDABLE VACANT LOTS WHERE DIRECTED BY THE ENGINEER. ADDITIONAL QUANTITIES HAVE BEEN INCLUDED FOR THESE ITEMS IN THE BID FORM.
21. THE CONTRACTOR SHALL FOLLOW ALL FEDERAL, STATE AND LOCAL REQUIREMENTS FOR SAFETY WHEN IN CONFINED SPACES. THE CONTRACTOR IS ALSO REFERRED TO RECOMMENDATIONS IN THE NATIONAL INSTITUTE FOR OCCUPATIONAL SAFETY AND HEALTH PUBLICATION NO. 80–106, "WORKING IN CONFINED SPACES".
22. CONTRACTOR TO MAINTAIN FLOW IN EXISTING DRAINS AT ALL TIMES.
23. THE CONTRACTOR SHALL HAVE ON SITE A SUPPLY OF RED SEWER BRICK, 1–FT AND 2–FT MANHOLE RISER SECTIONS AND FLAT SLAB TOPS TO ADJUST THE MANHOLE FINISHED GRADES AS REQUIRED TO FIT THE ACTUAL ELEVATION OF THE GROUND OR ROAD SURFACE AT THE TIME OF CONSTRUCTION. CONTRACTOR SHALL CONFIRM ROAD PROFILE ELEVATIONS PRIOR TO ORDERING MANHOLE SECTIONS.
24. CONTRACTOR SHALL FOLLOW TOWN REGULATIONS FOR ALL "TOWN" TREES TO BE CUT/TRIMMED AND OR REMOVED WITHIN THE LIMITS OF THE TOWN RIGHT–OF–WAY. TREES AND SHRUBS REQUIRING CUTTING MAY OR MAY NOT BE IDENTIFIED ON DRAWINGS; ALL TREE AND SHRUB TRIMMING AND REMOVAL SHALL BE REVIEWED IN THE FIELD WITH THE ENGINEER PRIOR TO CUTTING.
25. TEST PITS SHALL BE EXCAVATED AS SHOWN ON THE PLANS AND/OR AS DIRECTED BY THE ENGINEER. CONTRACTOR SHALL OBTAIN THE LOCATION OF THE UTILITY IN QUESTION WITH TIES TO SURROUNDING FEATURES AND THE ELEVATION OF BOTH THE TOP AND BOTTOM OF THE UTILITY/STRUCTURE.
26. CONTRACTOR SHALL CONFORM TO THE REQUIREMENTS FOR MAINTAINING TRAFFIC AS DETAILED ON THE CONTRACT SPECIFICATIONS, AND AS REQUIRED BY THE TOWN.
27. THE CONTRACTOR IS REQUIRED TO FOLLOW THE PIPE TESTING PROCEDURES STATED IN THE SPECIFICATIONS. PIPE TESTING WILL BE STRICTLY ENFORCED.

ABBREVIATIONS

ABDN	ABANDON	LWA	LOW WATER ALARM
ADDL	ADDITIONAL	LWL	LOW WATER LEVEL
ADJ	ADJUSTABLE, ADJUST	MAX	MAXIMUM
ADPT	ADAPTER	MEAS	MEASURE
AFG	ABOVE FINISHED GRADE	MFD	MANUFACTURED
AL	ALUMINUM	MFG	MANUFACTURING
APPROX	APPROXIMATE (LY)	MGD	MILLION GALLONS PER DAY
AR	ACID RESISTANT	MH	MANHOLE
ARND	AROUND	MISC	MISCELLANEOUS
ASPH	ASPHALT	MON	MONUMENT
ASTM	AMERICAN SOCIETY FOR TESTING MATERIALS	MPH	MILES PER HOUR
		MTD	MOUNTED
AUTO	AUTOMATIC	N	NORTH
AUX	AUXILIARY	NC	NORMALLY CLOSED
AVG	AVERAGE	NEC	NATIONAL ELECTRIC CODE
BM	BENCHMARK	NOS	NATIONAL OCEANOGRAPHIC SURVEY
BOT	BOTTOM	NTS	NOT TO SCALE
BTWN	BETWEEN	O/E	OR EQUAL
CAP	CAPACITY	OD	OUTSIDE DIAMETER
CLR	CLEAR	OH	OVERHEAD (DOOR)
CO	CLEAN OUT	OPP	OPPOSITE
COMB	COMBINATION	OPT	OPTION(AL)
CONC	CONCRETE	PC	POINT OF CURVE (ATURE)
CONST	CONSTRUCTION	PERF	PERFORATED
CTR	CENTER (ED)	PI	POINT OF INTERSECTION
CU FT	CUBIC FOOT (FEET)	PLT	PLANT
DI	DUCTILE IRON PIPE	PRESS	PRESSURE
DIA	DIAMETER	PRIM	PRIMARY
DICL	DUCTILE IRON CEMENT LINED	PS	PUMP STATION
DIEL	DUCTILE IRON EPOXY LINED	PT	POINT
DIV	DIVISION	PV	PLUG VALVE
DN	DOWN	PVC	POLY VINYL CHLORIDE PIPE
DO	DITTO	QTY	QUALITY OR QUANTITY
DWG	DRAWING	R/W	RIGHT–OF–WAY
EA	EACH	RAD	RADIUS
ECC	ECCENTRIC	RCP	REINFORCED CONCRETE PIPE
EF	EACH FACE	RED	REDUCER
ELEC	ELECTRIC(AL)	REF	REFERENCE/REFER
EMERG	EMERGENCY	RPM	REVOLUTIONS PER MINUTE
ENGR	ENGINEER	S	SOUTH
EOP	EDGE OF PAVEMENT	SS	SANITARY SEWER
EQUIV	EQUIVALENT	SL	SIGNAL LINE
ETC	ETCETERA	SLV	SLEEVE
EW	EACH WAY	SPR	SPRING
EXTD	EXTENDED	SQ	SQUARE
FAC	FACILITY	SST	STAINLESS STEEL
FIG	FIGURE	STA	STATION
FLG	FLANGE(D)	STRUC	STRUCTURE (S, URAL)
FLG	FLOORING	SWK	SIDEWALK
FM	FORCE MAIN	SYM	SYMMETRICAL
FT	FEET/FOOT	T&B	TOP AND BOTTOM
FTG	FOOTING/FITTING	TAN	TANGENCY
GALVS	GALVANIZED STEEL	TECH	TECHNICAL
GPD	GALLONS PER DAY	TEL	TELEPHONE
GPM	GALLONS PER MINUTE	TEMP	TEMPERATURE
GRAV	GRAVITY	TM	TELEMETER OR TIME
GSKT	GASKET	TOS	TOP OF STEEL
HB	HOSE BIBB	TV	TELEVISION
HEX	HEXAGON	UGTC	UNDERGROUND TELEPHONE CABLE
HGT	HEIGHT	UNO	UNLESS NOTED OTHERWISE
HS	HIGH SERVICE	VAR	VARIOUS/VARIABLE
HS	HIGH STRENGTH	VBR	VACUUM BREAKER
HWA	HIGH WATER ALARM	VOL	VOLUME
HWL	HIGH WATER LEVEL	WH	WATER HEATER
Hz	HERTZ	WL	WATER LEVEL
ID	INSIDE DIAMETER	WM	WATER MAIN
IE	INVERT ELEVATION	WS	WATER SURFACE OR WATERSTOP
IN	INCH	WT	WEIGHT
INVT	INVERT	WTHPRF	WEATHERPROOF
JCT	JUNCTION	WWTP	WASTEWATER TREATMENT PLANT
LB	POUND	XFER	TRANSFER
LF	LINEAL FEET	YD	YARD
LG	LENGTH	YR	YEAR
LG	LONG		
LR	LONG RADIUS		

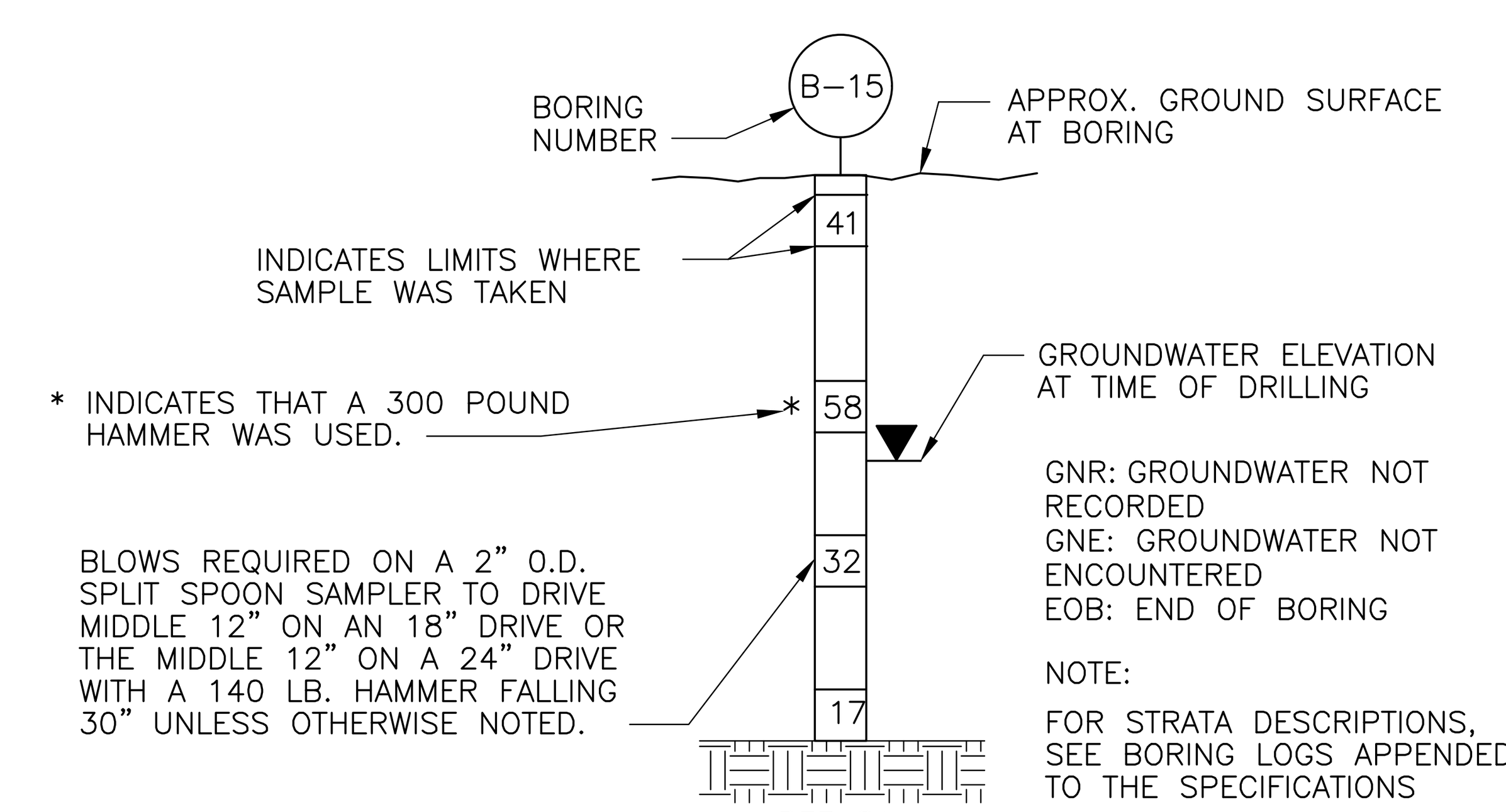

TYPICAL BORING LOG

SYMBOLS

SECTION CUT SYMBOLS

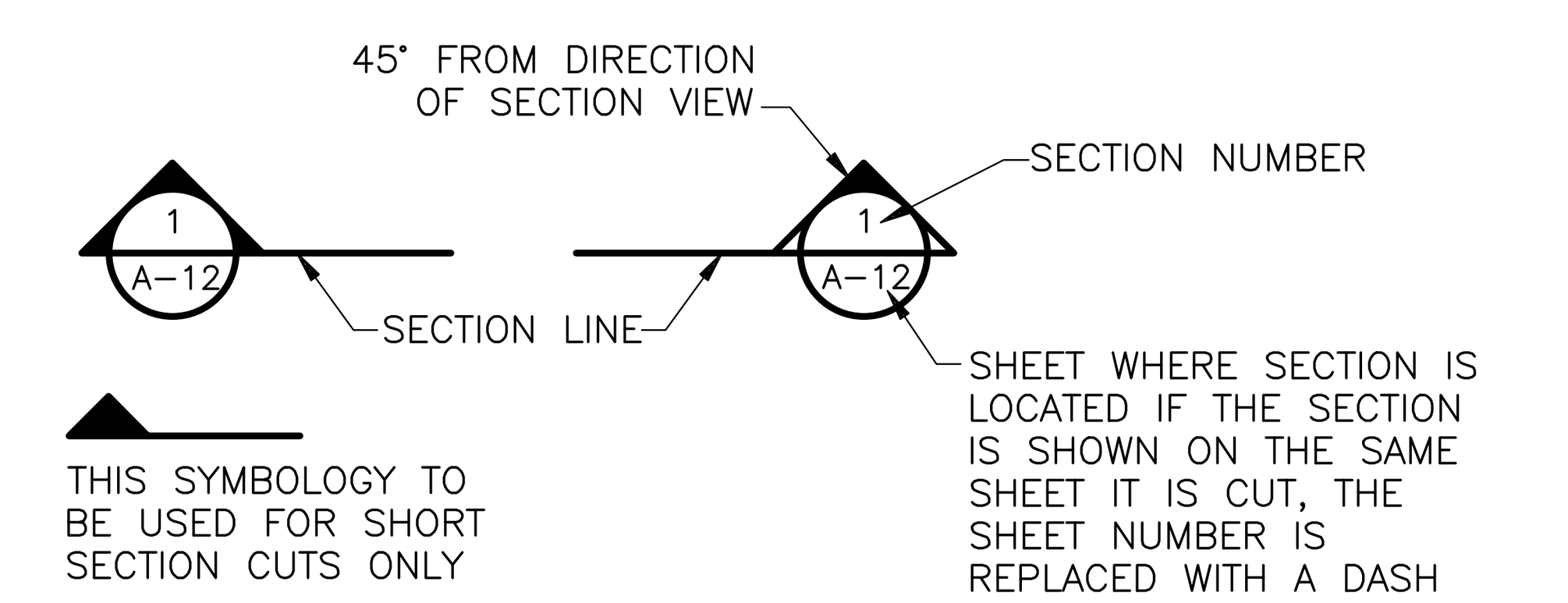

DETAIL CALL OUT SYMBOLS

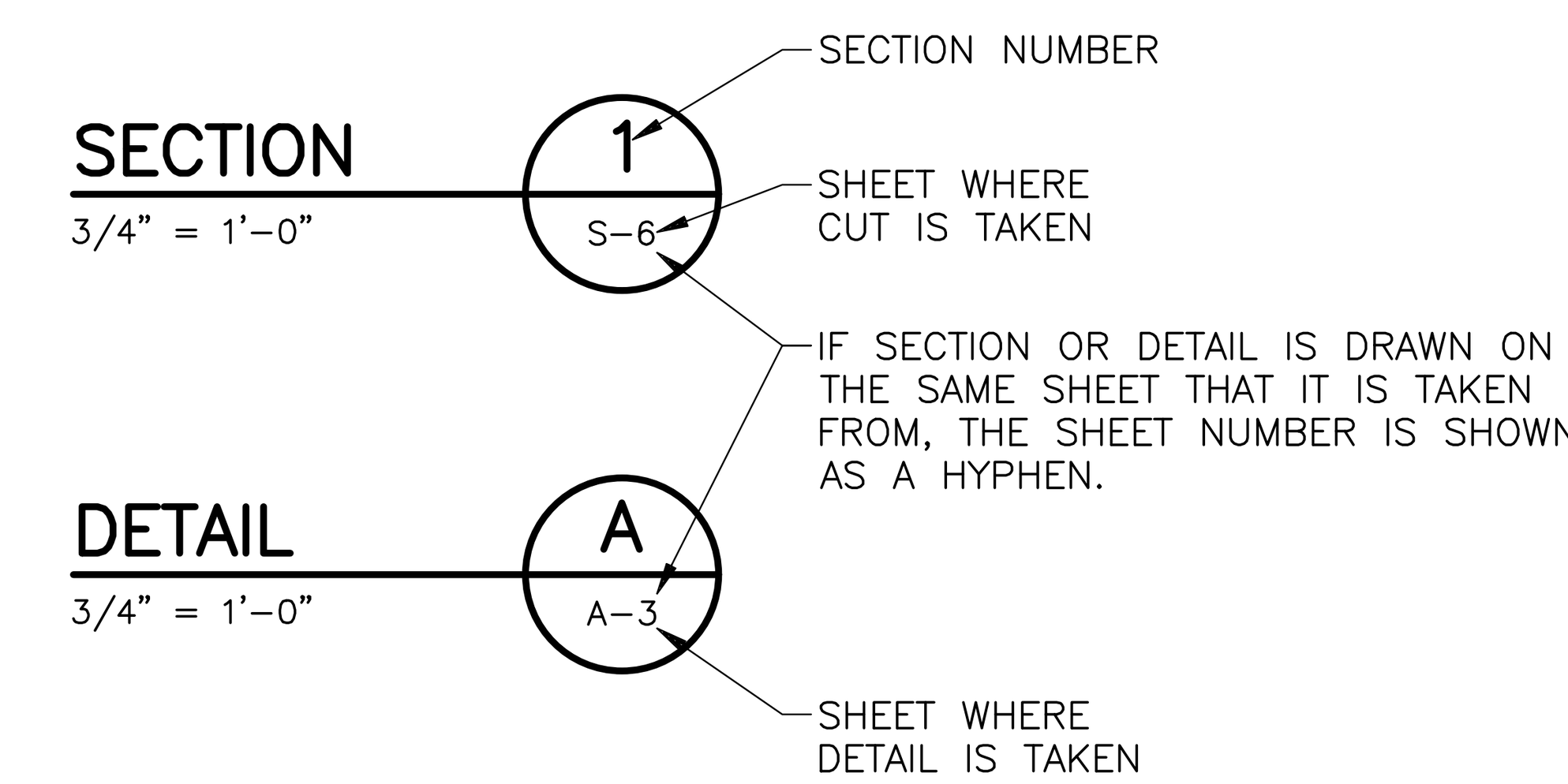

DRAWING, SECTION AND DETAIL TITLES

SUBTITLE OR DESCRIPTION (AS REQ'D)

PLAN

1/4" = 1'–0"

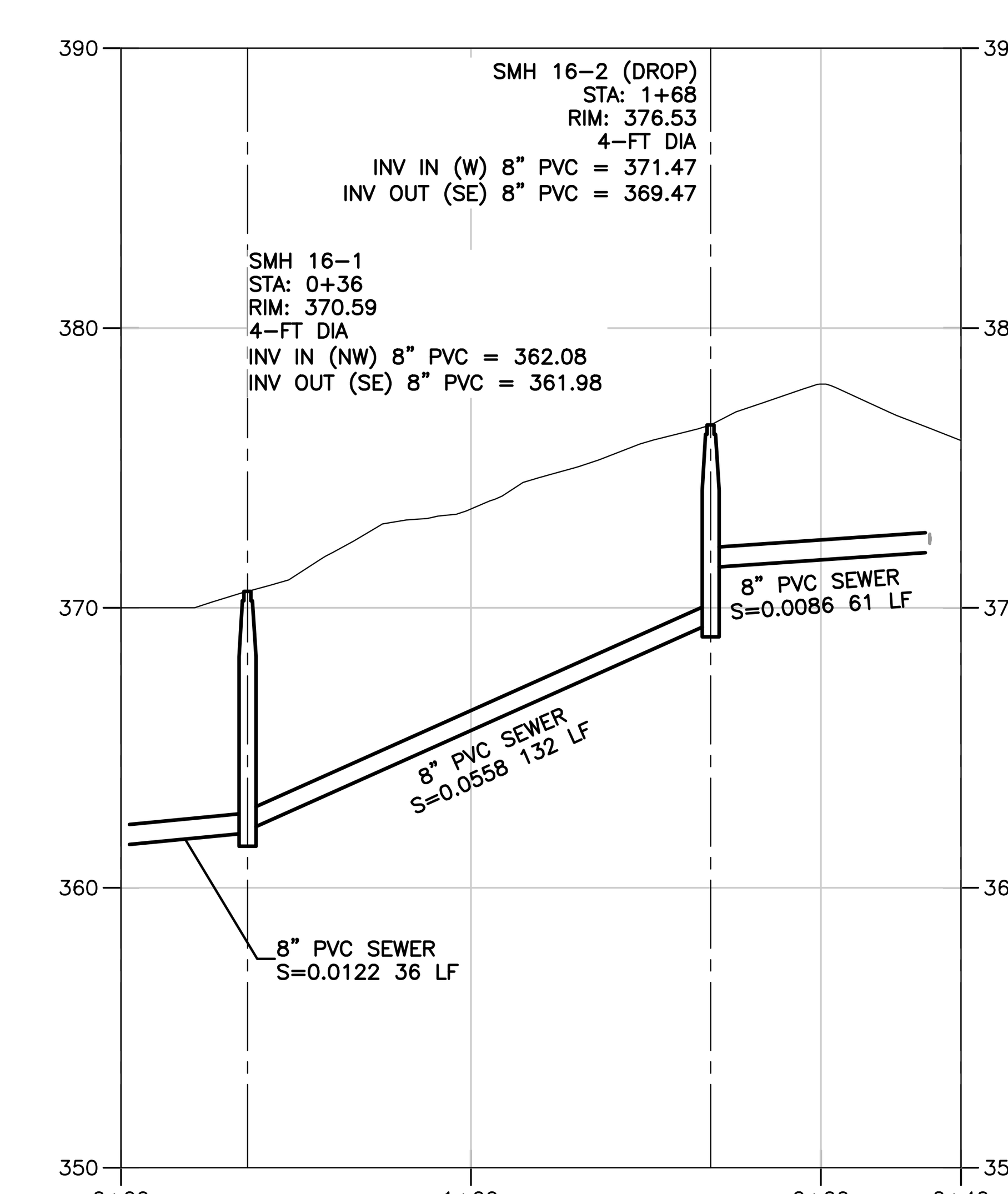

INVERT ELEVATION DESIGNATIONS

LEGEND

- EXISTING FIELD TOPOGRAPHIC SURVEY CONTOUR
- PROPOSED CONTOUR
- PROPOSED ELEVATION
- EXISTING FIELD TOPOGRAPHIC SURVEY ELEVATION
- EXISTING TOWN OF BROOKFIELD ELEVATION
- EXISTING TREELINE
- PROPOSED TREELINE
- PROPOSED SILT FENCE OR COMPOSITE FILTER SOCK
- LIMIT OF WETLANDS
- EXISTING/PROPOSED SIGN
- PROPOSED LIGHT POLE
- EXISTING UTILITY POLE
- PROPERTY LINE
- EXISTING CHAIN LINK FENCE
- EXISTING BARBED/BOX WIRE FENCE
- EXISTING STOCKADE FENCE
- PROPOSED FENCE
- EXISTING IRON PIN
- PROPOSED IRON PIN
- EXISTING MONUMENT
- PROPOSED MONUMENT
- EXISTING EDGE OF CURB
- EXISTING OVERHEAD TRAFFIC LIGHTS
- EXISTING/PROPOSED CATCH BASIN
- EXISTING/PROPOSED TELEPHONE MANHOLE
- EXISTING/PROPOSED STORM MANHOLE
- EXISTING/PROPOSED SANITARY MANHOLE
- EXISTING/PROPOSED DROP SANITARY MANHOLE
- EXISTING/PROPOSED ELECTRIC MANHOLE
- EXISTING WELL
- PROPOSED WELL
- PROPOSED SANITARY SEWER LATERAL
- PROPOSED SANITARY SEWER MAIN
- EXISTING SANITARY SEWER MAIN
- EXISTING STORM DRAINAGE MAIN
- EXISTING WATER MAIN AND WATER LATERAL
- PROPOSED YARD HYDRANT
- PROPOSED SANITARY SEWER LATERAL
- EXISTING UTILITIES
- EXISTING OVERHEAD WIRES
- PROPOSED ELECTRICAL CONDUIT
- PROPOSED UTILITIES
- EXISTING STONEWALL
- EXISTING MONITOR WELL
- EXISTING SEPTIC SYSTEM
- EXISTING BUILDING
- NORTH ARROW
- MATCHLINE
- DIRECT PUSH GEOPROBE LOCATION
- BORING LOCATION
- CHECK VALVE
- PLUG VALVE
- RESTRAINED DISMANTLING JOINT
- RESTRAINED COUPLING

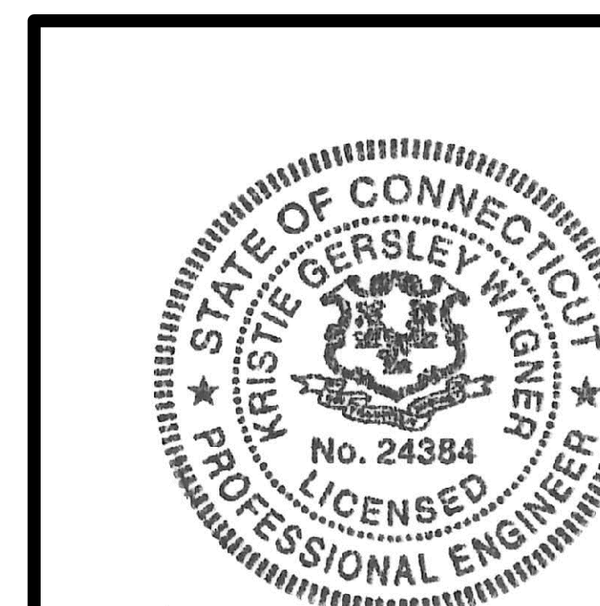

Digitally signed by Kristie G Wagner
Date: 2026.04.29 15:12:37-04'00'

REV. NO.	DATE	DRWN	CHKD	REMARKS

DESIGNED BY: S. SIDANALE
DRAWN BY: S. SIDANALE
SHEET CHK'D BY: K. WAGNER
CROSS CHK'D BY: D. MURPHY
APPROVED BY: K. WAGNER
DATE: APRIL 2026

CDM Smith
101 East River Drive, Suite 1A
East Hartford, CT 06108
Tel: (860) 529-7615

BROOKFIELD, CONNECTICUT

DEAN AND POCONO ROADS
GRAVITY SANITARY SEWER EXTENSION

GENERAL NOTES, LEGEND AND ABBREVIATIONS

PROJECT NO. 261865–269061
FILE NAME: G002NFPL.DWG

SHEET NO.
G-2

REUSE OF DOCUMENTS: THESE DOCUMENTS AND DESIGNS PROVIDED BY PROFESSIONAL SERVICE, INCORPORATED HEREIN, ARE THE PROPERTY OF CDM SMITH AND ARE NOT TO BE USED, IN WHOLE OR PART, FOR ANY OTHER PROJECT WITHOUT THE WRITTEN AUTHORIZATION OF CDM SMITH.
© 2026 CDM SMITH ALL RIGHTS RESERVED.
pw:\\cdmsmith-az02-pw.bentley.com:pw_pl1\261865\269061\04 Design Services NM_90%\01 General\10 BIM_CADD\DEAN-POCONO\Gravity\G002NFPL.dwg
Last saved by: ENGELSB Time: 4/28/2026 8:06:03 AM
XREFs: [CDMS_2234] Images: [Wagner Kristie CT PE Stamp]

XREFs: [CEP000SS_CVZ001PP_CDMS_2234_CEP001SS] Images: [Wagner Kristie CT PE Stamp]
Last saved by: ENGELSB Time: 4/24/2026 4:47:46 PM
pw:\\cdmsmith-as02-pw.bentley.com:pw_p\11261865\26906104 Design Services NM_90%\02 Civil\10 BIM_CADD\00 DEAN-POCONO\01 Gravity\CPLPR001.dwg
© 2026 CDM SMITH ALL RIGHTS RESERVED.
REUSE OF DOCUMENTS: THESE DOCUMENTS AND DESIGNS PROVIDED BY PROFESSIONAL SERVICE, INCORPORATED HEREIN, ARE THE PROPERTY OF CDM SMITH AND ARE NOT TO BE USED, IN WHOLE OR PART, FOR ANY OTHER PROJECT WITHOUT THE WRITTEN AUTHORIZATION OF CDM SMITH.

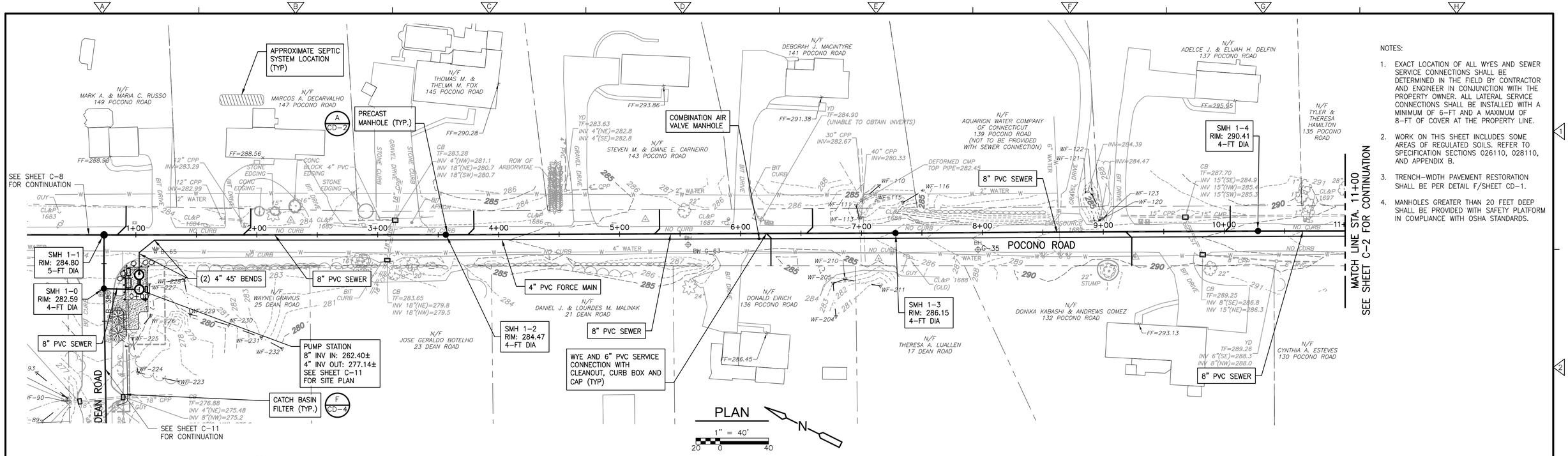

NOTES:

1. EXACT LOCATION OF ALL WYES AND SEWER SERVICE CONNECTIONS SHALL BE DETERMINED IN THE FIELD BY CONTRACTOR AND ENGINEER IN CONJUNCTION WITH THE PROPERTY OWNER. ALL LATERAL SERVICE CONNECTIONS SHALL BE INSTALLED WITH A MINIMUM OF 6-FT AND A MAXIMUM OF 8-FT OF COVER AT THE PROPERTY LINE.
2. WORK ON THIS SHEET INCLUDES SOME AREAS OF REGULATED SOILS. REFER TO SPECIFICATION SECTIONS 026110, 028110, AND APPENDIX B.
3. TRENCH-WIDTH PAVEMENT RESTORATION SHALL BE PER DETAIL F/SHEET CD-1.
4. MANHOLES GREATER THAN 20 FEET DEEP SHALL BE PROVIDED WITH SAFETY PLATFORM IN COMPLIANCE WITH OSHA STANDARDS.

SMH 1-0
RIM: 282.59
STA: 3+64, 4-FT DIA
INV IN (SW) 8" PVC = 262.64
INV IN (NE) 8" PVC = 262.64
INV OUT (SE) 8" PVC = 262.54

SMH 1-1 (DROP) (B CD-2)
RIM: 284.80
STA: 0+74, 5-FT DIA
INV IN (NW) 8" PVC = 263.84
INV IN (SE) 8" PVC = 274.72
INV OUT (SW) 8" PVC = 262.82

SMH 1-2
RIM: 284.47
STA: 3+56, 4-FT DIA
INV IN (SE) 8" PVC = 275.97
INV OUT (NW) 8" PVC = 275.87

SMH 1-3
RIM: 286.15
STA: 7+28, 4-FT DIA
INV IN (SE) 8" PVC = 277.56
INV OUT (NW) 8" PVC = 277.46

SMH 1-4
RIM: 290.41
STA: 10+28, 4-FT DIA
INV IN (SE) 8" PVC = 283.94
INV OUT (NW) 8" PVC = 283.84

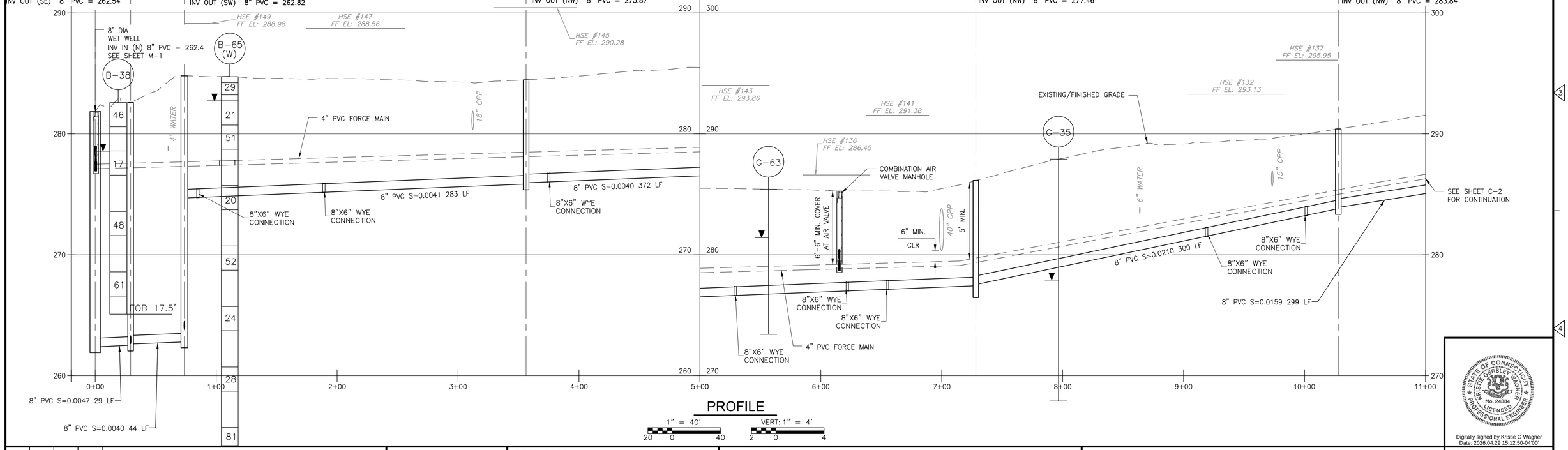

PROFILE
1" = 40'
VERT: 1" = 4'

REV. NO.	DATE	DRWN	CHKD	REMARKS

DESIGNED BY: S. SIDANALE
DRAWN BY: S. SIDANALE
SHEET CHK'D BY: K. WAGNER
CROSS CHK'D BY: D. MURPHY
APPROVED BY: K. WAGNER
DATE: APRIL 2026

CDM Smith
101 East River Drive, Suite 1A
East Hartford, CT 06108
Tel: (860) 529-7615

BROOKFIELD, CONNECTICUT

DEAN AND POCONO ROADS GRAVITY SANITARY SEWER EXTENSION

POCONO ROAD PLAN AND PROFILE - I

STATE OF CONNECTICUT * KRISTIE GERSLEY-WAGNER * No. 24384 * LICENSED PROFESSIONAL ENGINEER *
Digitally signed by Kristie G Wagner
Date: 2026.04.29 15:12:50-04'00'

PROJECT NO. 261865-269061
FILE NAME: CPLPR001.DWG
SHEET NO. C-1

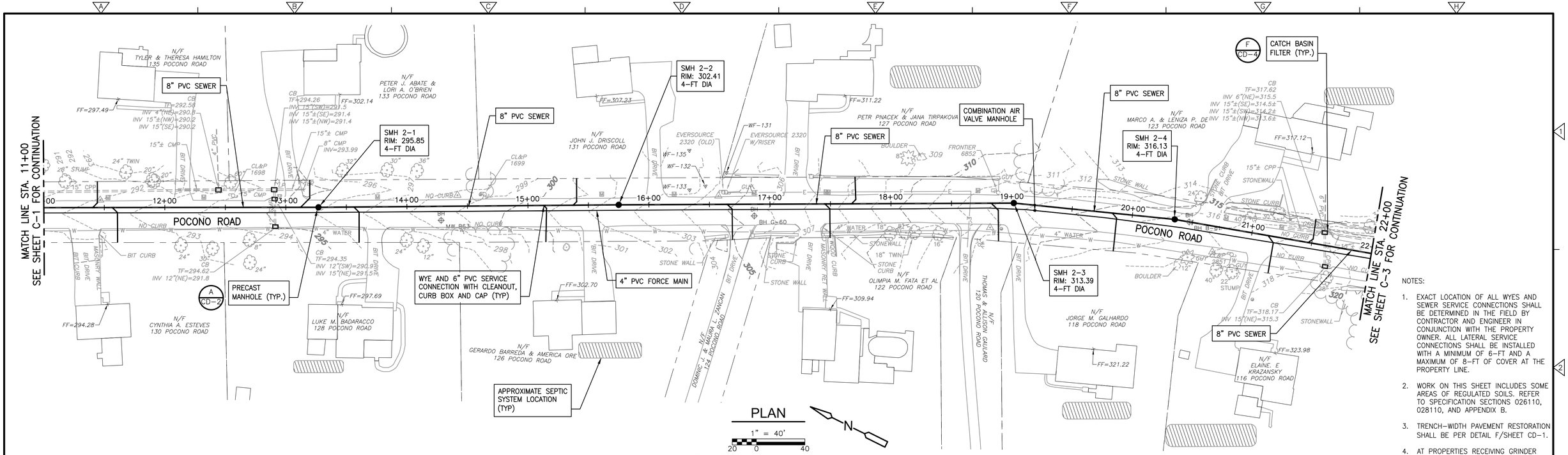

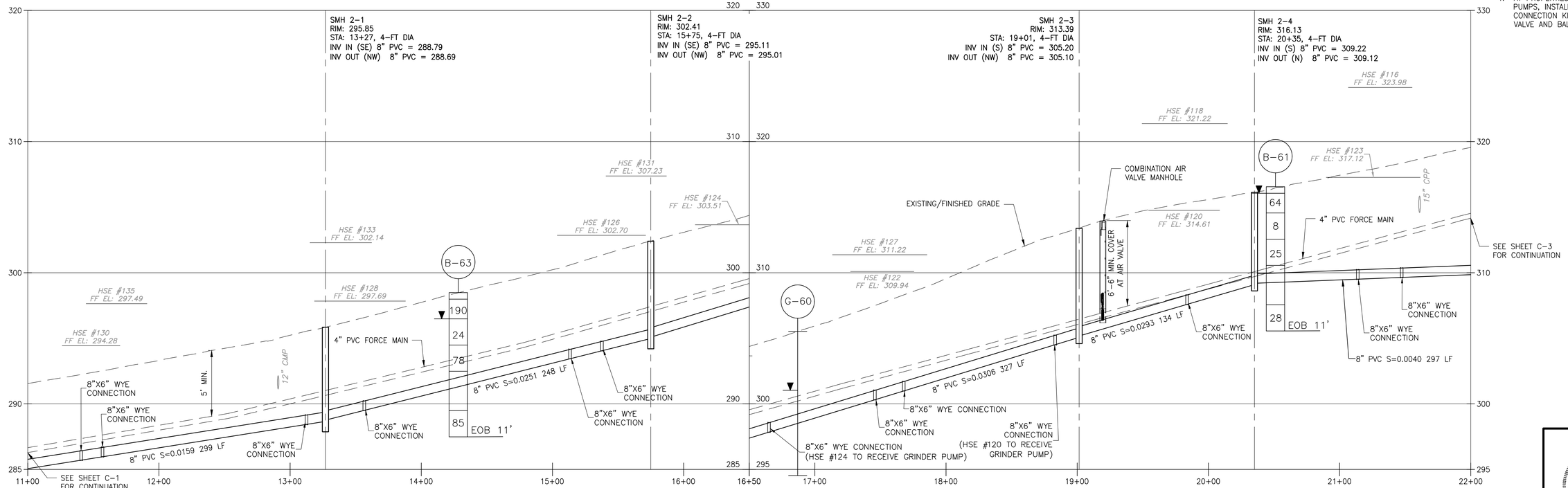

NOTES:

1. EXACT LOCATION OF ALL WYES AND SEWER SERVICE CONNECTIONS SHALL BE DETERMINED IN THE FIELD BY CONTRACTOR AND ENGINEER IN CONJUNCTION WITH THE PROPERTY OWNER. ALL LATERAL SERVICE CONNECTIONS SHALL BE INSTALLED WITH A MINIMUM OF 6-FT AND A MAXIMUM OF 8-FT OF COVER AT THE PROPERTY LINE.
2. WORK ON THIS SHEET INCLUDES SOME AREAS OF REGULATED SOILS. REFER TO SPECIFICATION SECTIONS 026110, 028110, AND APPENDIX B.
3. TRENCH-WIDTH PAVEMENT RESTORATION SHALL BE PER DETAIL F/SHEET CD-1.
4. AT PROPERTIES RECEIVING GRINDER PUMPS, INSTALL PUMPED LATERAL CONNECTION KIT INCLUDING CHECK VALVE AND BALL VALVE AT CURB BOX

REV. NO.	DATE	DRWN	CHKD	REMARKS

DESIGNED BY: S. SIDANALE
DRAWN BY: S. SIDANALE
SHEET CHK'D BY: K. WAGNER
CROSS CHK'D BY: D. MURPHY
APPROVED BY: K. WAGNER
DATE: APRIL 2026

CDM Smith
101 East River Drive, Suite 1A
East Hartford, CT 06108
Tel: (860) 529-7615

BROOKFIELD, CONNECTICUT

DEAN AND POCONO ROADS GRAVITY SANITARY SEWER EXTENSION

POCONO ROAD PLAN AND PROFILE - II

STATE OF CONNECTICUT · KRISTIE BERSLEY WAGNER · No. 24384 · LICENSED PROFESSIONAL ENGINEER

Digitally signed by Kristie G Wagner
Date: 2026.04.29 15:13:05-04'00'

PROJECT NO. 261865-269061
FILE NAME: CPLPRO02.DWG

SHEET NO.
C-2

XREFs: [CEP005SS, CWZ001PP, CDMS_2234, CEP001SS] Images: [Wagner Kristie CT PE Stamp]
Last saved by: ENGELSB Time: 4/28/2026 12:04:28 PM
pw:\\cdmsmith-ad2\pw-bentley.com\pw_pl\126\865269\d0\104 Design Services NM_90%\02 Civil\10 BIM_CADD\00 DEAN-POCONO\01 Gravity\CPLPR001.dwg
© 2026 CDM SMITH ALL RIGHTS RESERVED.
REUSE OF DOCUMENTS: THESE DOCUMENTS AND DESIGNS PROVIDED BY PROFESSIONAL SERVICE, INCORPORATED HEREIN, ARE THE PROPERTY OF CDM SMITH AND ARE NOT TO BE USED, IN WHOLE OR PART, FOR ANY OTHER PROJECT WITHOUT THE WRITTEN AUTHORIZATION OF CDM SMITH.

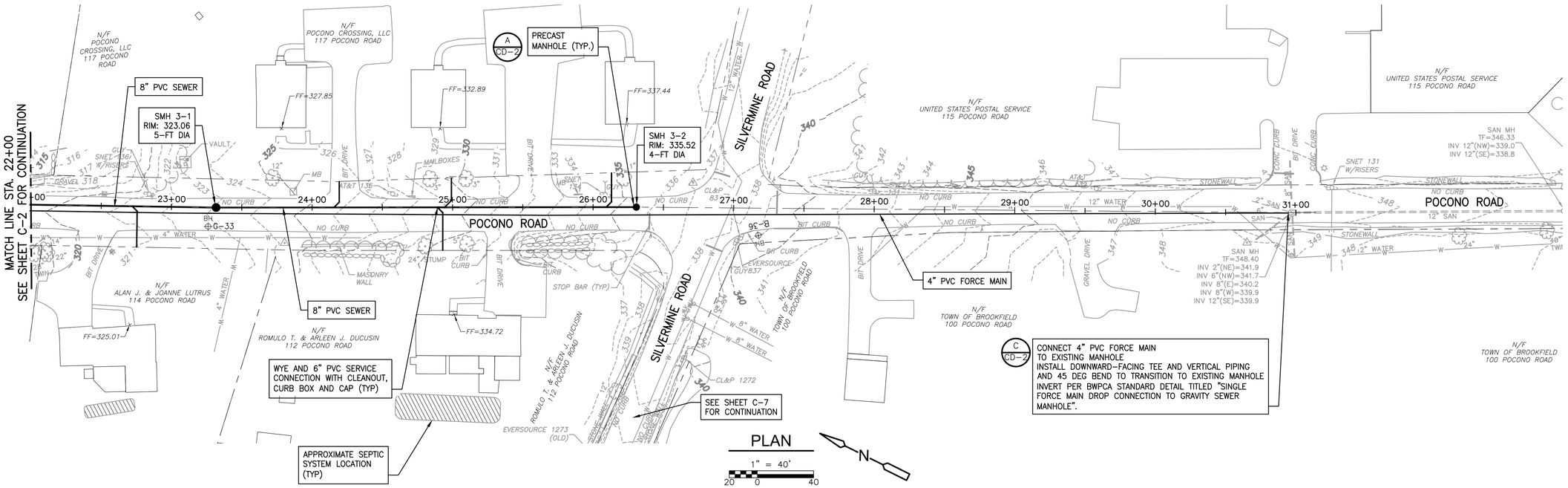

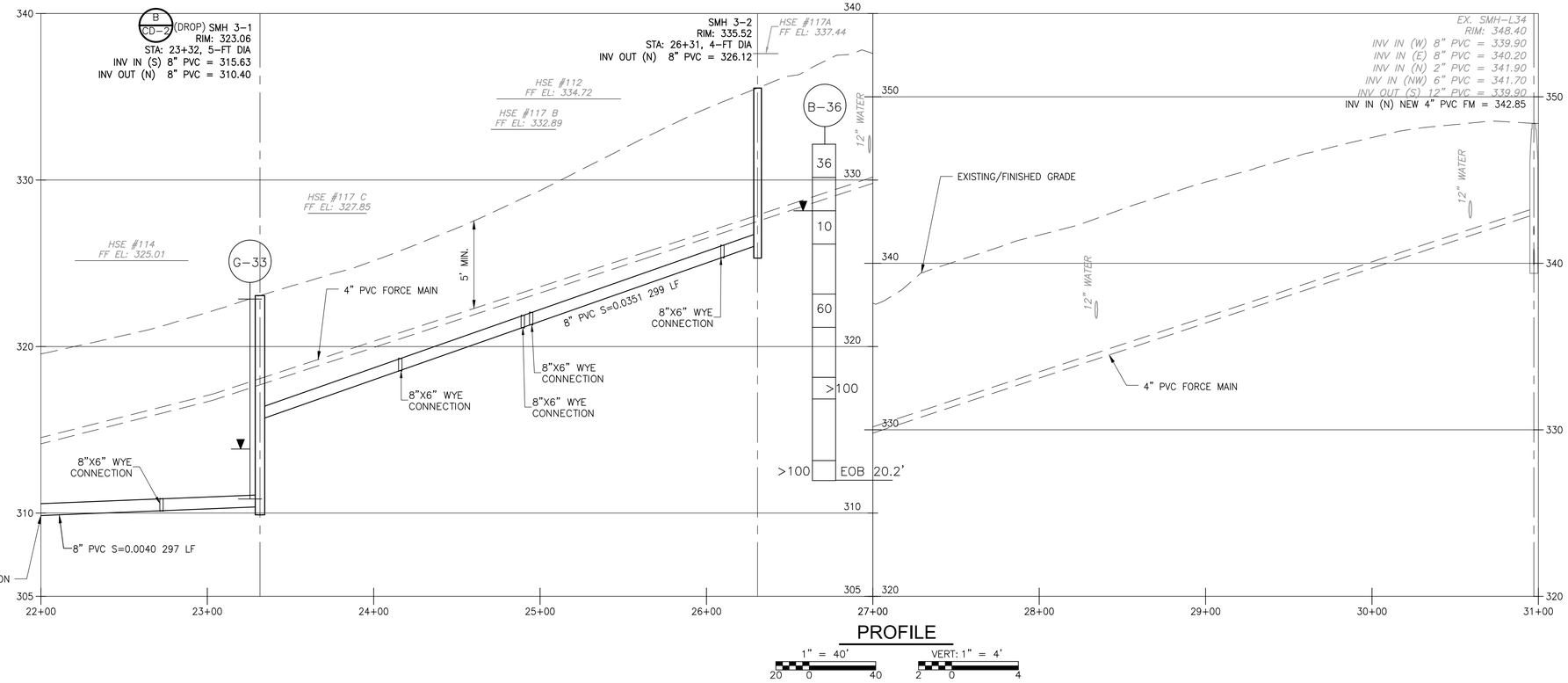

NOTES:

1. EXACT LOCATION OF ALL WYES AND SEWER SERVICE CONNECTIONS SHALL BE DETERMINED IN THE FIELD BY CONTRACTOR AND ENGINEER IN CONJUNCTION WITH THE PROPERTY OWNER. ALL LATERAL SERVICE CONNECTIONS SHALL BE INSTALLED WITH A MINIMUM OF 6-FT AND A MAXIMUM OF 8-FT OF COVER AT THE PROPERTY LINE.
2. WORK ON THIS SHEET INCLUDES SOME AREAS OF REGULATED SOILS AND SOME AREAS OF CURRENTLY-UNCLASSIFIED SOILS. REFER TO SPECIFICATION SECTIONS 026110, 028110, AND APPENDIX B.
3. TRENCH-WIDTH PAVEMENT RESTORATION SHALL BE PER DETAIL F/SHEET CD-1.

STATE OF CONNECTICUT KRISTIE GERSLEY WAGNER No. 24384 LICENSED PROFESSIONAL ENGINEER

Digitally signed by Kristie G Wagner
Date: 2026.04.29 15:13:15-04'00'

REV. NO.	DATE	DRWN	CHKD	REMARKS

DESIGNED BY: S. SIDANALE
DRAWN BY: S. SIDANALE
SHEET CHK'D BY: K. WAGNER
CROSS CHK'D BY: D. MURPHY
APPROVED BY: K. WAGNER
DATE: APRIL 2026

CDM Smith
101 East River Drive, Suite 1A
East Hartford, CT 06108
Tel: (860) 529-7615

BROOKFIELD, CONNECTICUT

DEAN AND POCONO ROADS
GRAVITY SANITARY SEWER EXTENSION

POCONO ROAD
PLAN AND PROFILE - III

PROJECT NO. 261865-269061
FILE NAME: CPLPR003.DWG

SHEET NO.
C-3

XREFs: [CEP000SS, CWZ001PP, CDMS_2234, CEP001SS] Images: [Wagner Kristie CT PE Stamp]
Last saved by: ENGELSB Time: 4/27/2026 8:46:38 AM
pw:\cdmsmith-az02-pw.bentley.com:pw_p11261865\d269061\04 Design Services NM_90%\02 Civil\10 BIM_CADD\00 DEAN-POCONO\01 Gravity\CPLPR001.dwg
© 2026 CDM SMITH ALL RIGHTS RESERVED
REUSE OF DOCUMENTS: THESE DOCUMENTS AND DESIGNS PROVIDED BY PROFESSIONAL SERVICE, INCORPORATED HEREIN, ARE THE PROPERTY OF CDM SMITH AND ARE NOT TO BE USED, IN WHOLE OR PART, FOR ANY OTHER PROJECT WITHOUT THE WRITTEN AUTHORIZATION OF CDM SMITH.

XREFs: (CEP005SS, CWZ001PP, CDMS_2234, CEP001SS) Images: (Wagner Kristie CT PE Stamp)
Last saved by: ENGELSB Time: 4/29/2026 8:18:30 AM
pw://cdmsmith-ad02-pw.bentley.com:pw_pi/1261865/26906104 Design Services NM_90%\02 Civil\10 BIM_CADD\00 DEAN-POCONO\01 Gravity\CPLPR001.dwg
© 2026 CDM SMITH ALL RIGHTS RESERVED.
REUSE OF DOCUMENTS: THESE DOCUMENTS AND DESIGNS PROVIDED BY PROFESSIONAL SERVICE, INCORPORATED HEREIN, ARE THE PROPERTY OF CDM SMITH AND ARE NOT TO BE USED, IN WHOLE OR PART, FOR ANY OTHER PROJECT WITHOUT THE WRITTEN AUTHORIZATION OF CDM SMITH.

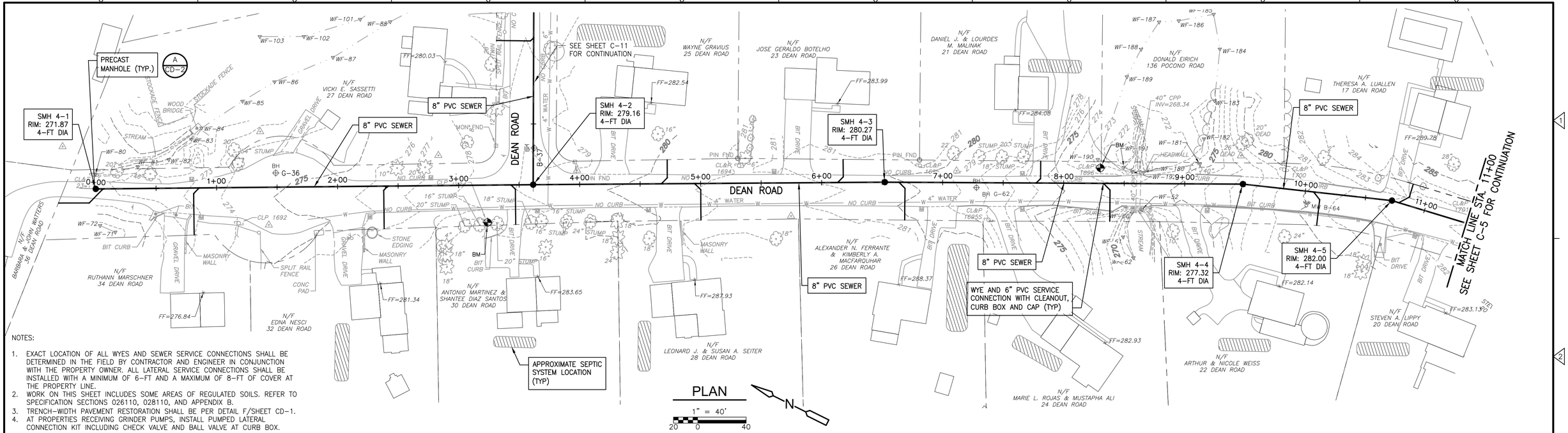

NOTES:

1. EXACT LOCATION OF ALL WYES AND SEWER SERVICE CONNECTIONS SHALL BE DETERMINED IN THE FIELD BY CONTRACTOR AND ENGINEER IN CONJUNCTION WITH THE PROPERTY OWNER. ALL LATERAL SERVICE CONNECTIONS SHALL BE INSTALLED WITH A MINIMUM OF 6-FT AND A MAXIMUM OF 8-FT OF COVER AT THE PROPERTY LINE.
2. WORK ON THIS SHEET INCLUDES SOME AREAS OF REGULATED SOILS. REFER TO SPECIFICATION SECTIONS 026110, 028110, AND APPENDIX B.
3. TRENCH-WIDTH PAVEMENT RESTORATION SHALL BE PER DETAIL F/SHEET CD-1.
4. AT PROPERTIES RECEIVING GRINDER PUMPS, INSTALL PUMPED LATERAL CONNECTION KIT INCLUDING CHECK VALVE AND BALL VALVE AT CURB BOX.

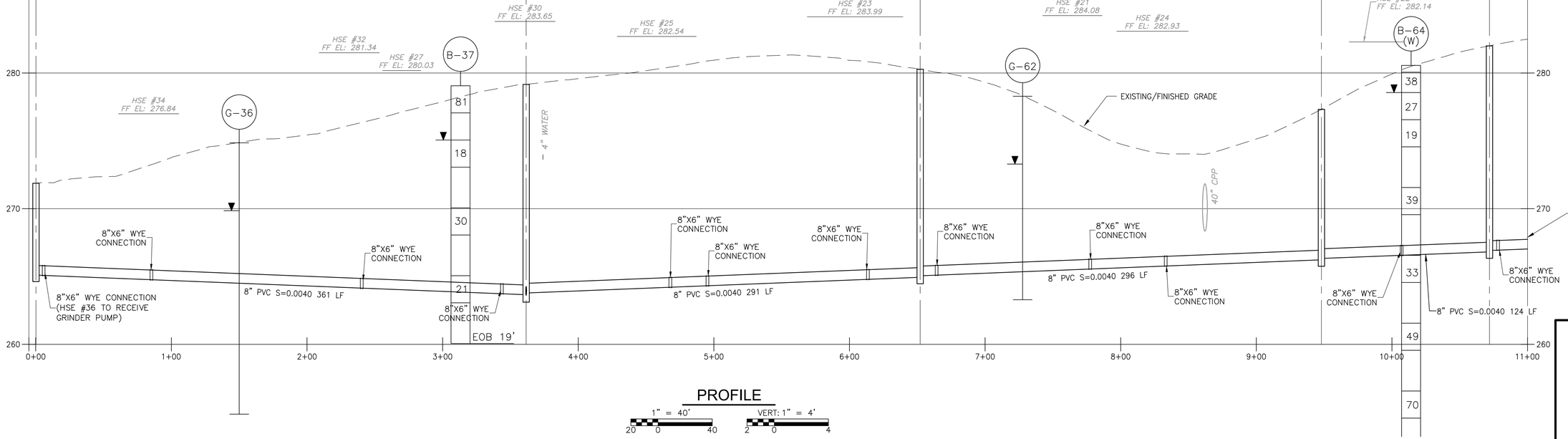

Digitally signed by Kristie G Wagner
Date: 2026.04.29 15:13:25-04'00'

REV. NO.	DATE	DRWN	CHKD	REMARKS

DESIGNED BY: S. SIDANALE
DRAWN BY: S. SIDANALE
SHEET CHK'D BY: K. WAGNER
CROSS CHK'D BY: D. MURPHY
APPROVED BY: K. WAGNER
DATE: APRIL 2026

CDM Smith
101 East River Drive, Suite 1A
East Hartford, CT 06108
Tel: (860) 529-7615

BROOKFIELD, CONNECTICUT

DEAN AND POCONO ROADS GRAVITY SANITARY SEWER EXTENSION

DEAN ROAD PLAN AND PROFILE - I

PROJECT NO. 261865-269061
FILE NAME: CPLPR004.DWG
SHEET NO. C-4

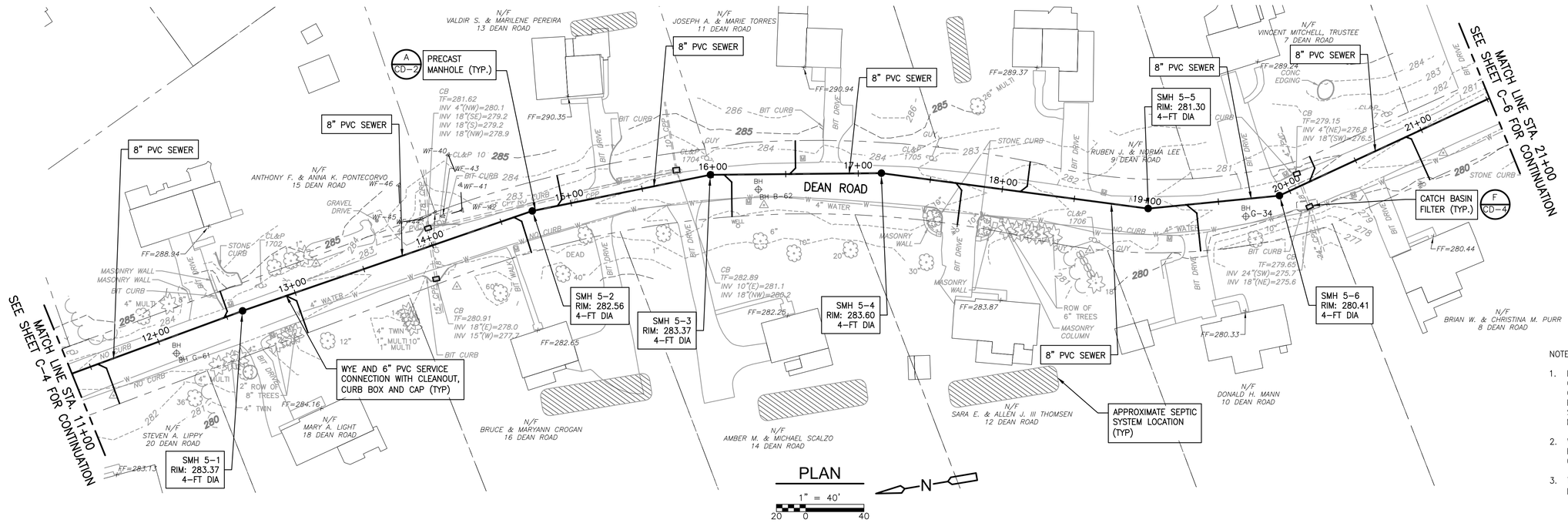

NOTES:

1. EXACT LOCATION OF ALL WYES AND SEWER SERVICE CONNECTIONS SHALL BE DETERMINED IN THE FIELD BY CONTRACTOR AND ENGINEER IN CONJUNCTION WITH THE PROPERTY OWNER. ALL LATERAL SERVICE CONNECTIONS SHALL BE INSTALLED WITH A MINIMUM OF 6-FT AND A MAXIMUM OF 8-FT OF COVER AT THE PROPERTY LINE.
2. WORK ON THIS SHEET INCLUDES SOME AREAS OF REGULATED SOILS. REFER TO SPECIFICATION SECTIONS 026110, 028110, AND APPENDIX B.
3. TRENCH-WIDTH PAVEMENT RESTORATION SHALL BE PER DETAIL F/SHEET CD-1.

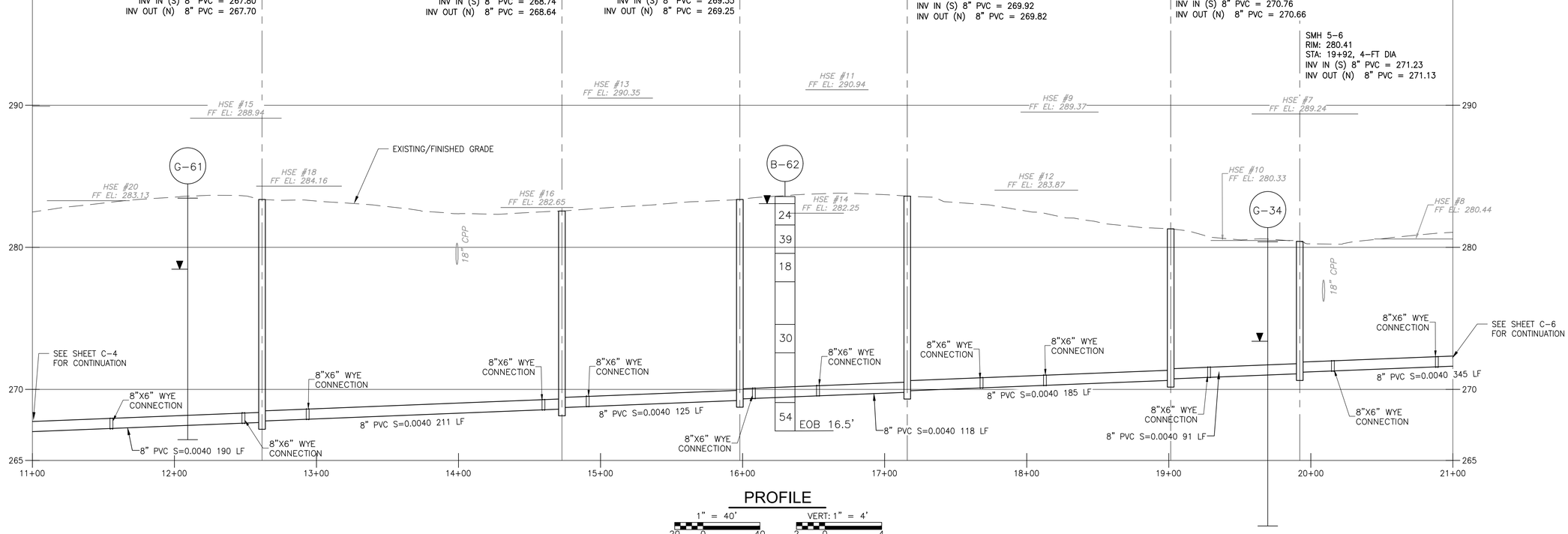

REV. NO.	DATE	DRWN	CHKD	REMARKS

DESIGNED BY: S. SIDANALE
DRAWN BY: S. SIDANALE
SHEET CHK'D BY: K. WAGNER
CROSS CHK'D BY: D. MURPHY
APPROVED BY: K. WAGNER
DATE: APRIL 2026

CDM Smith
101 East River Drive, Suite 1A
East Hartford, CT 06108
Tel: (860) 529-7615

BROOKFIELD, CONNECTICUT

DEAN AND POCONO ROADS
GRAVITY SANITARY SEWER EXTENSION

DEAN ROAD
PLAN AND PROFILE - II

STATE OF CONNECTICUT KRISTIE GERSLEY WAGNER No. 24384 LICENSED PROFESSIONAL ENGINEER

Digitally signed by Kristie G Wagner
Date: 2026.04.29 15:13:35-04'00'

PROJECT NO. 261865-269061
FILE NAME: CPLPR005.DWG

SHEET NO.
C-5

XREFs: [CEP000SS_CWZ001PP_CDMS_2234_CEP001SS] Images: []
Last saved by: SIDANALESS Time: 12/26/2025 6:35:56 PM
pw:\\cdmsmith-az02-pw.bentley.com:pw_pi1\261865\269061\04 Design Services NM_90%\02 Civil\10 BIM_CADD\00 DEAN-POCONO\01 Gravity\CPLPR001.dwg
© 2026 CDM SMITH ALL RIGHTS RESERVED.
REUSE OF DOCUMENTS: THESE DOCUMENTS AND DESIGNS PROVIDED BY PROFESSIONAL SERVICE, INCORPORATED HEREIN, ARE THE PROPERTY OF CDM SMITH AND ARE NOT TO BE USED, IN WHOLE OR PART, FOR ANY OTHER PROJECT WITHOUT THE WRITTEN AUTHORIZATION OF CDM SMITH.

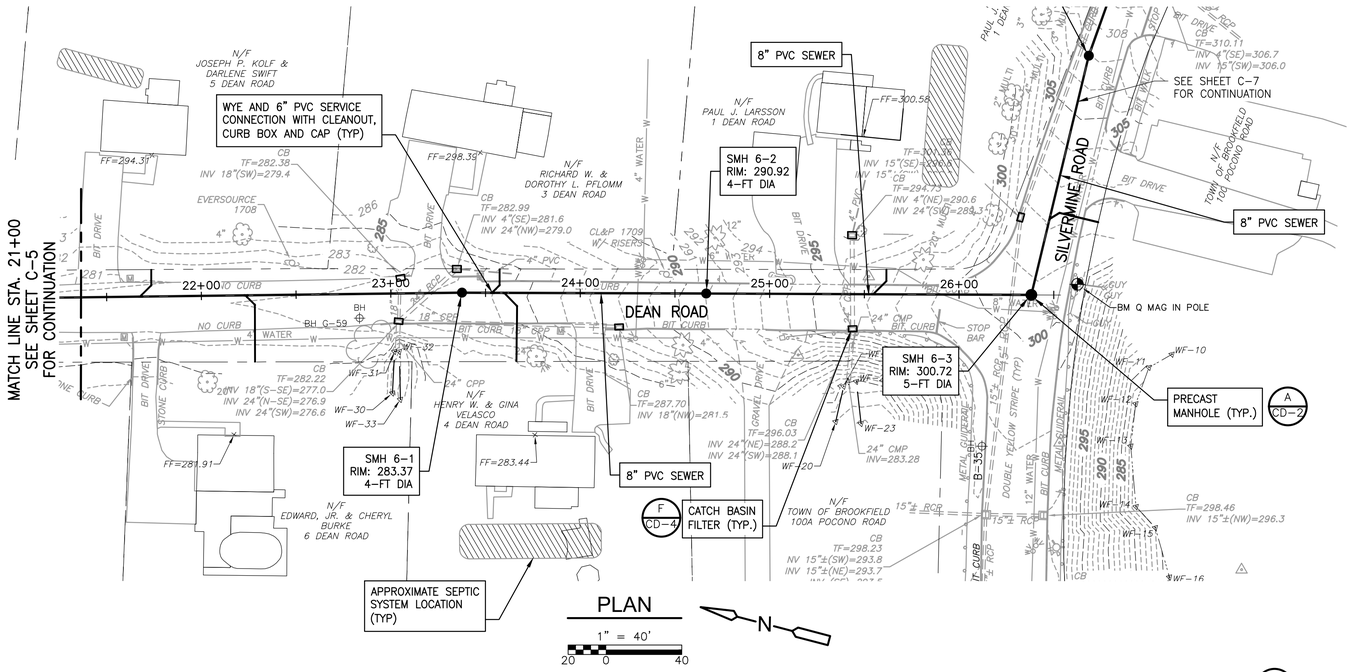

NOTES:

1. EXACT LOCATION OF ALL WYES AND SEWER SERVICE CONNECTIONS SHALL BE DETERMINED IN THE FIELD BY CONTRACTOR AND ENGINEER IN CONJUNCTION WITH THE PROPERTY OWNER. ALL LATERAL SERVICE CONNECTIONS SHALL BE INSTALLED WITH A MINIMUM OF 6-FT AND A MAXIMUM OF 8-FT OF COVER AT THE PROPERTY LINE.
2. WORK ON THIS SHEET INCLUDES SOME AREAS OF REGULATED SOILS. REFER TO SPECIFICATION SECTIONS 026110, 028110, AND APPENDIX B.
3. TRENCH-WIDTH PAVEMENT RESTORATION SHALL BE PER DETAIL F/SHEET CD-1.

XREFs: [CEP005SS_CWZ001PP_CDMS_2234_CEP001SS] Images: [Wagner Kristie CT PE Stamp]
Last saved by: ENGELSB Time: 4/29/2026 9:37:27 AM
pw:\\cdmsmith-ad2\Documents-pw.bentley.com:pw_pn\126\1865\26906104 Design Services NM_90%\02 Civil\10 BIM_CADD\00 DEAN-POCONO\01 Gravity\CPLPR001.dwg
© 2026 CDM SMITH ALL RIGHTS RESERVED.
REUSE OF DOCUMENTS: THESE DOCUMENTS AND DESIGNS PROVIDED BY PROFESSIONAL SERVICE, INCORPORATED HEREIN, ARE THE PROPERTY OF CDM SMITH AND ARE NOT TO BE USED, IN WHOLE OR PART, FOR ANY OTHER PROJECT WITHOUT THE WRITTEN AUTHORIZATION OF CDM SMITH.

REV. NO.	DATE	DRWN	CHKD	REMARKS

DESIGNED BY: S. SIDANALE
DRAWN BY: S. SIDANALE
SHEET CHK'D BY: K. WAGNER
CROSS CHK'D BY: D. MURPHY
APPROVED BY: K. WAGNER
DATE: APRIL 2026

CDM Smith
101 East River Drive, Suite 1A
East Hartford, CT 06108
Tel: (860) 529-7615

BROOKFIELD, CONNECTICUT

DEAN AND POCONO ROADS GRAVITY SANITARY SEWER EXTENSION

DEAN ROAD PLAN AND PROFILE - III

STATE OF CONNECTICUT
KRISTIE BERSLEY WAGNER
No. 24384
LICENSED PROFESSIONAL ENGINEER

Digitally signed by Kristie G Wagner
Date: 2026.04.29 15:13:47-04'00'

PROJECT NO. 261865-269061
FILE NAME: CPLPR006.DWG

SHEET NO.
C-6

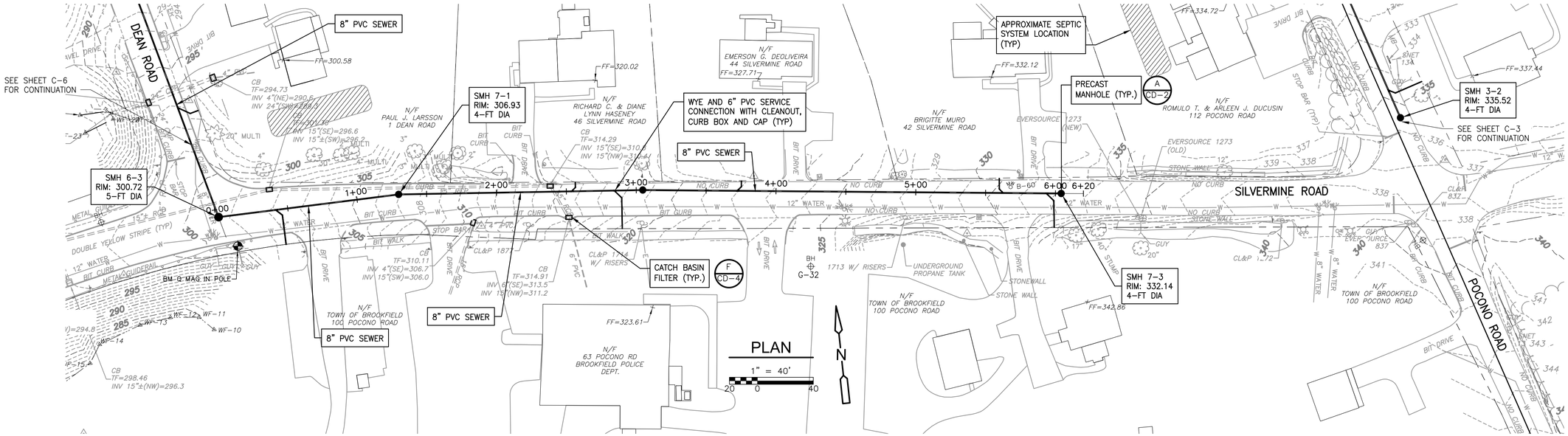

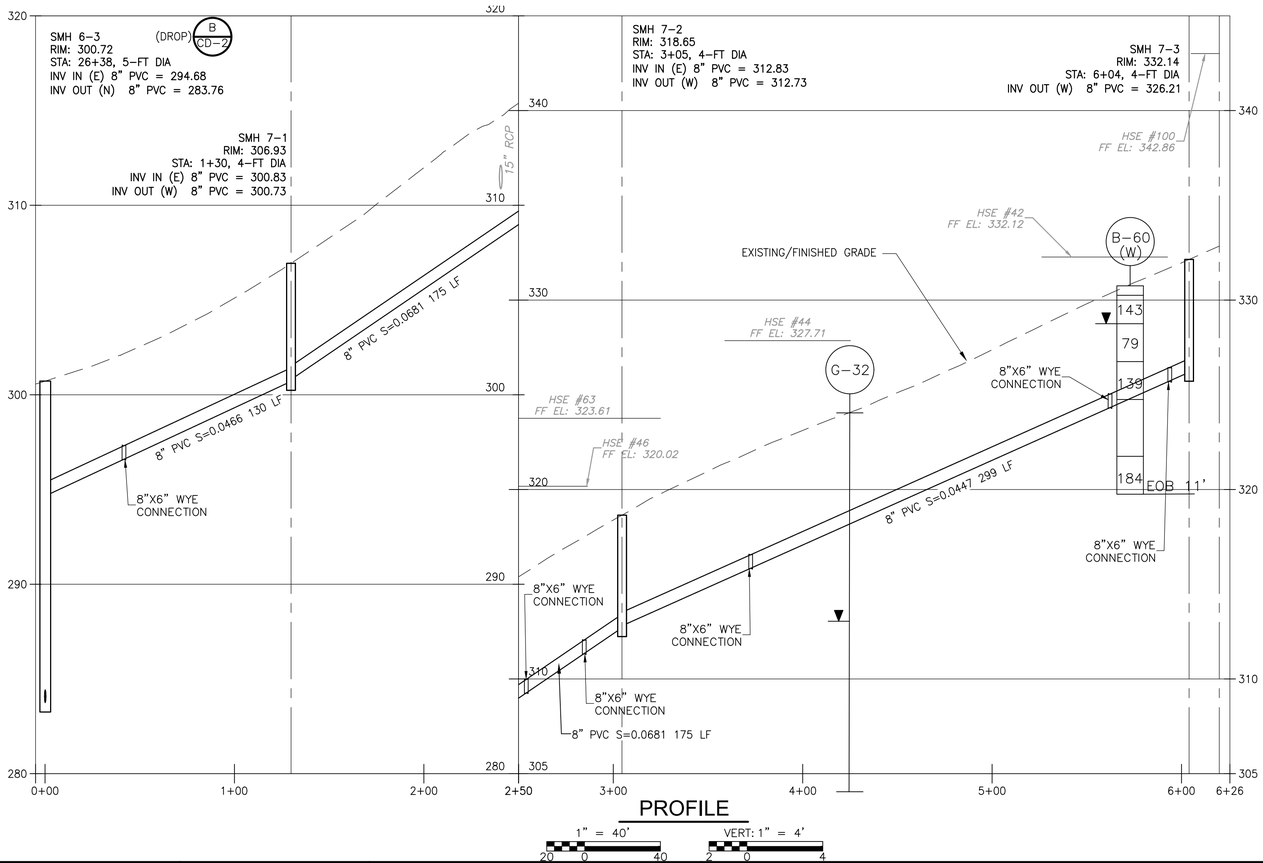

NOTES:

1. EXACT LOCATION OF ALL WYES AND SEWER SERVICE CONNECTIONS SHALL BE DETERMINED IN THE FIELD BY CONTRACTOR AND ENGINEER IN CONJUNCTION WITH THE PROPERTY OWNER. ALL LATERAL SERVICE CONNECTIONS SHALL BE INSTALLED WITH A MINIMUM OF 6-FT AND A MAXIMUM OF 8-FT OF COVER AT THE PROPERTY LINE.
2. WORK ON THIS SHEET INCLUDES SOME AREAS OF REGULATED SOILS AND SOME AREAS OF CURRENTLY-UNCLASSIFIED SOILS. REFER TO SPECIFICATION SECTIONS 026110, 028110, AND APPENDIX B.
3. TRENCH-WIDTH PAVEMENT RESTORATION SHALL BE PER DETAIL F/SHEET CD-1.
4. LIMITED CONTRACTOR STAGING AREA SPACE TO BE PROVIDED ON TOWN OF BROOKFIELD PROPERTY LOCAED AT 100 POCONO ROAD. REFER TO SPECIFICATON SECTION 015000.

XREFs: [CEP000SS_CW2001PP_CDMS_2234_CEP001SS] Images: []
Last saved by: SIDANALESS Time: 2/2/2026 1:17:54 PM
p:\\cdmsmith-azd2-pw.bentley.com:pw_prl\261865\269061\04 Design Services NM_90%\02 Civil\10 BIM_CADD\00 DEAN-POCONO\01 Gravity\CPLPR001.dwg
© 2026 CDM SMITH ALL RIGHTS RESERVED.
REUSE OF DOCUMENTS: THESE DOCUMENTS AND DESIGNS PROVIDED BY PROFESSIONAL SERVICE, INCORPORATED HEREIN, ARE THE PROPERTY OF CDM SMITH AND ARE NOT TO BE USED, IN WHOLE OR PART, FOR ANY OTHER PROJECT WITHOUT THE WRITTEN AUTHORIZATION OF CDM SMITH.

REV. NO.	DATE	DRWN	CHKD	REMARKS

DESIGNED BY: S. SIDANALE
DRAWN BY: S. SIDANALE
SHEET CHK'D BY: K. WAGNER
CROSS CHK'D BY: D. MURPHY
APPROVED BY: K. WAGNER
DATE: APRIL 2026

CDM Smith
101 East River Drive, Suite 1A
East Hartford, CT 06108
Tel: (860) 529-7615

BROOKFIELD, CONNECTICUT

DEAN AND POCONO ROADS
GRAVITY SANITARY SEWER EXTENSION

SILVERMINE ROAD
PLAN AND PROFILE

Digitally signed by Kristie G Wagner
Date: 2026.04.29 15:13:55-04'00'

PROJECT NO. 261865-269061
FILE NAME: CPLPR007.DWG

SHEET NO.
C-7

NOTES:

1. EXACT LOCATION OF ALL WYES AND SEWER SERVICE CONNECTIONS SHALL BE DETERMINED IN THE FIELD BY CONTRACTOR AND ENGINEER IN CONJUNCTION WITH THE PROPERTY OWNER. ALL LATERAL SERVICE CONNECTIONS SHALL BE INSTALLED WITH A MINIMUM OF 6–FT AND A MAXIMUM OF 8–FT OF COVER AT THE PROPERTY LINE.
2. WORK ON THIS SHEET INCLUDES SOME AREAS OF REGULATED SOILS. REFER TO SPECIFICATION SECTIONS 026110, 028110, AND APPENDIX B.
3. TRENCH–WIDTH PAVEMENT RESTORATION SHALL BE PER DETAIL F/SHEET CD–1.
4. MANHOLES GREATER THAN 20 FEET DEEP SHALL BE PROVIDED WITH SAFETY PLATFORM IN COMPLIANCE WITH OSHA STANDARDS.

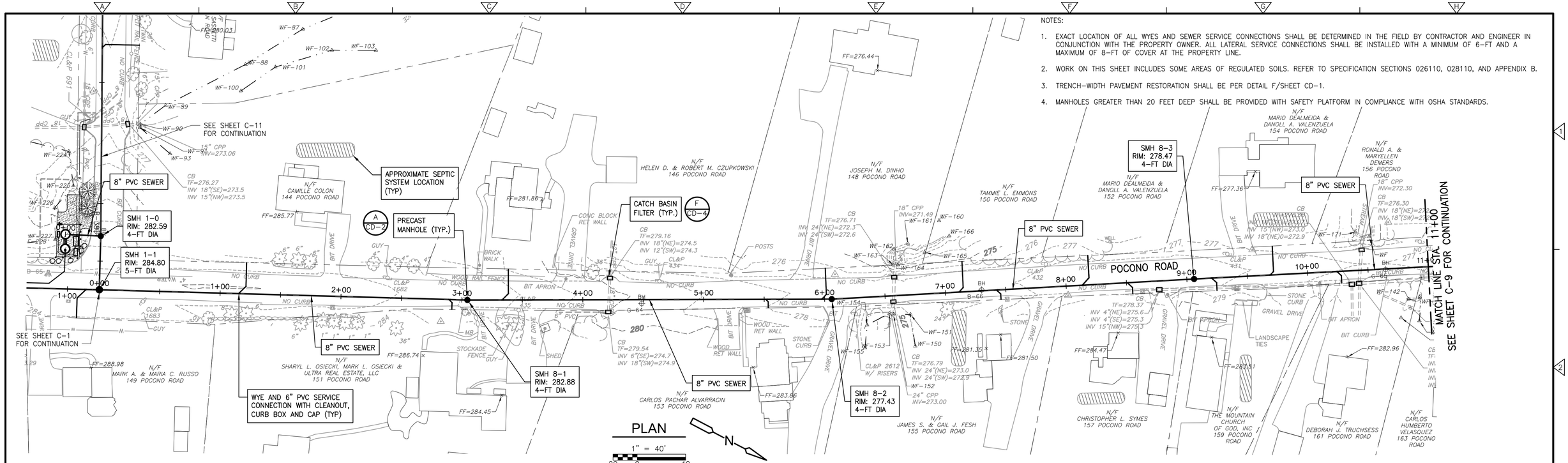

SMH 1–1
RIM: 284.80
STA: 0+74, 5–FT DIA
INV IN (NW) 8" PVC = 263.84
INV IN (SE) 8" PVC = 274.72
INV OUT (SW) 8" PVC = 262.82

SMH 8–1
RIM: 282.88
STA: 3+05, 4–FT DIA
INV IN (NW) 8" PVC = 265.16
INV OUT (SE) 8" PVC = 265.06

SMH 8–2
RIM: 277.43
STA: 6+06, 4–FT DIA
INV IN (NW) 8" PVC = 266.47
INV OUT (SE) 8" PVC = 266.37

SMH 8–3
RIM: 278.47
STA: 9+06, 4–FT DIA
INV IN (NW) 8" PVC = 267.77
INV OUT (SE) 8" PVC = 267.67

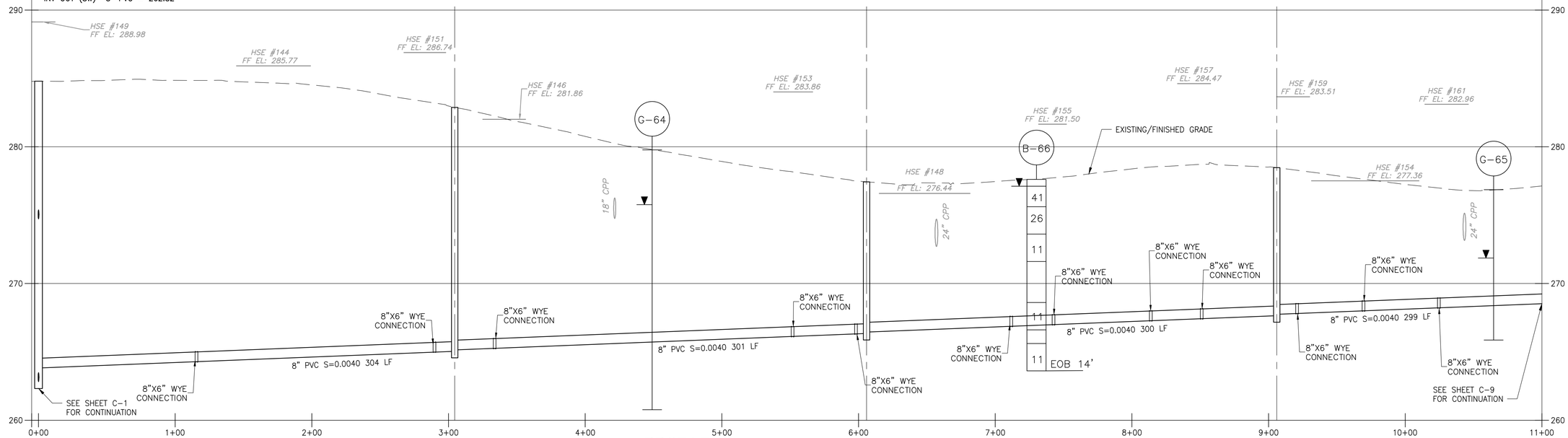

PROFILE
1" = 40' VERT: 1" = 4'

Digitally signed by Kristie G Wagner
Date: 2026.04.29 15:14:04-04'00'

REV. NO.	DATE	DRWN	CHKD	REMARKS

DESIGNED BY: S. SIDANALE
DRAWN BY: S. SIDANALE
SHEET CHK'D BY: K. WAGNER
CROSS CHK'D BY: D. MURPHY
APPROVED BY: K. WAGNER
DATE: APRIL 2026

CDM Smith
101 East River Drive, Suite 1A
East Hartford, CT 06108
Tel: (860) 529-7615

BROOKFIELD, CONNECTICUT

DEAN AND POCONO ROADS
GRAVITY SANITARY SEWER EXTENSION

POCONO ROAD
PLAN AND PROFILE - IV

PROJECT NO. 261865–269061
FILE NAME: CPLPR008.DWG
SHEET NO.
C-8

XREFs: [CEP000SS_CW2001PP_CDMS_2234_CEP001SS] Images: []
Last saved by: SIDANALESS Time: 2/2/2026 1:15:08 PM
pw:\\cdmsmith-a202-pw.bentley.com:pw_pr1\261865\269061\04 Design Services NM_90%\02 Civil\10 BIM_CADD\00 DEAN–POCONO\01 Gravity\CPLPR001.dwg
© 2026 CDM SMITH ALL RIGHTS RESERVED.
REUSE OF DOCUMENTS: THESE DOCUMENTS AND DESIGNS PROVIDED BY PROFESSIONAL SERVICE, INCORPORATED HEREIN, ARE THE PROPERTY OF CDM SMITH AND ARE NOT TO BE USED, IN WHOLE OR PART, FOR ANY OTHER PROJECT WITHOUT THE WRITTEN AUTHORIZATION OF CDM SMITH.

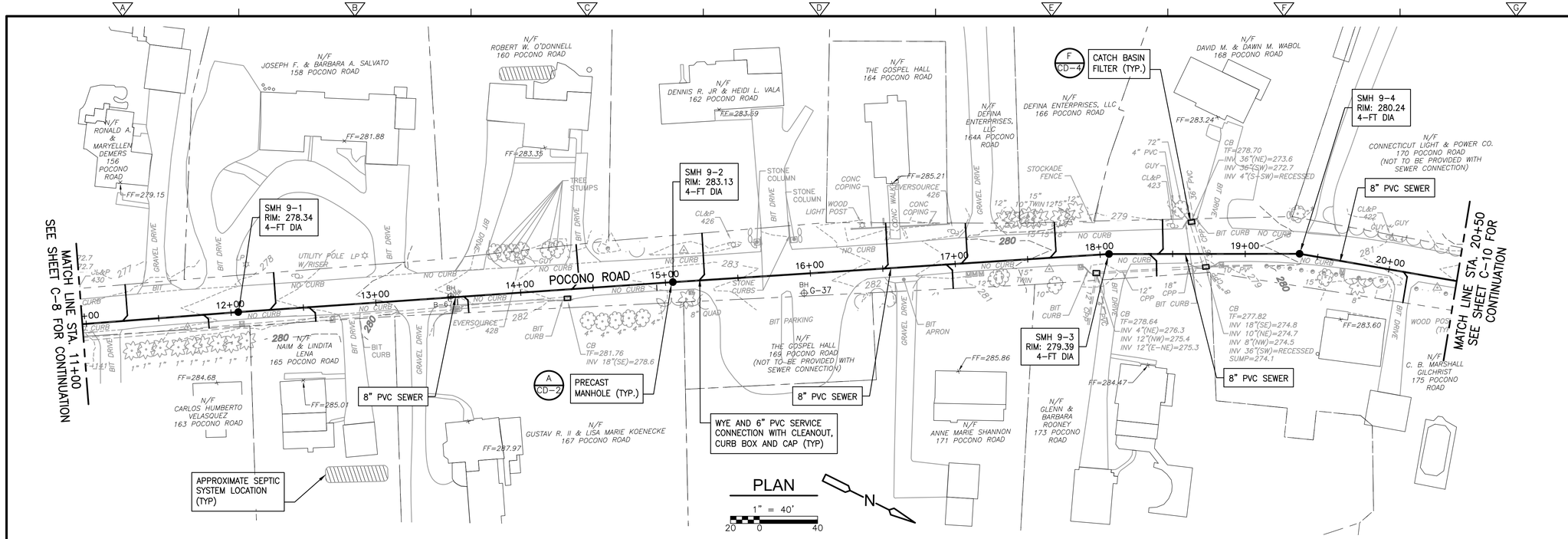

NOTES:

1. EXACT LOCATION OF ALL WYES AND SEWER SERVICE CONNECTIONS SHALL BE DETERMINED IN THE FIELD BY CONTRACTOR AND ENGINEER IN CONJUNCTION WITH THE PROPERTY OWNER. ALL LATERAL SERVICE CONNECTIONS SHALL BE INSTALLED WITH A MINIMUM OF 6-FT AND A MAXIMUM OF 8-FT OF COVER AT THE PROPERTY LINE.
2. WORK ON THIS SHEET INCLUDES SOME AREAS OF REGULATED SOILS. REFER TO SPECIFICATION SECTIONS 026110, 028110, AND APPENDIX B.
3. TRENCH-WIDTH PAVEMENT RESTORATION SHALL BE PER DETAIL F/SHEET CD-1.
4. AT PROPERTIES RECEIVING GRINDER PUMPS, INSTALL PUMPED LATERAL CONNECTION KIT INCLUDING CHECK VALVE AND BALL VALVE AT CURB BOX.

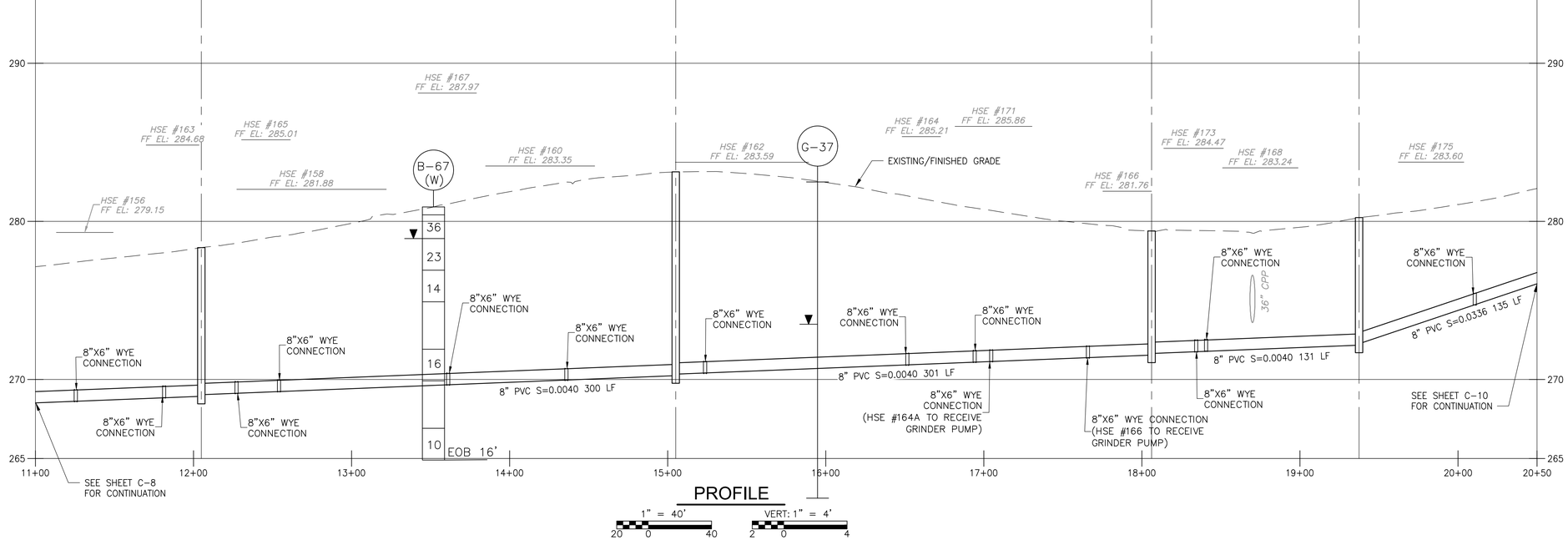

REV. NO.	DATE	DRWN	CHKD	REMARKS

DESIGNED BY: S. SIDANALE
DRAWN BY: S. SIDANALE
SHEET CHK'D BY: K. WAGNER
CROSS CHK'D BY: D. MURPHY
APPROVED BY: K. WAGNER
DATE: APRIL 2026

CDM Smith
101 East River Drive, Suite 1A
East Hartford, CT 06108
Tel: (860) 529-7615

BROOKFIELD, CONNECTICUT

DEAN AND POCONO ROADS
GRAVITY SANITARY SEWER EXTENSION

POCONO ROAD
PLAN AND PROFILE - V

STATE OF CONNECTICUT KRISTIE BERSLEY WAGNER No. 24384 LICENSED PROFESSIONAL ENGINEER

Digitally signed by Kristie G Wagner
Date: 2026.04.29 15:14:13-04'00'

PROJECT NO. 261865-269061
FILE NAME: CPLPR009.DWG

SHEET NO.
C-9

XREFs: [CEP000SS, CWZ001PP, CDMS_2234, CEP001SS] Images: []
Last saved by: SIDANALESS Time: 2/2/2026 1:25:41 PM
pw:\\cdmsmith-az02-pw.bentley.com:pw_p11\261865\269061\04 Design Services NM_905\02 Civil\10 BIM_CADD\00 DEAN-POCONO\01 Gravity\CPLPR001.dwg
© 2026 CDM SMITH ALL RIGHTS RESERVED.
REUSE OF DOCUMENTS: THESE DOCUMENTS AND DESIGNS PROVIDED BY PROFESSIONAL SERVICE, INCORPORATED HEREIN, ARE THE PROPERTY OF CDM SMITH AND ARE NOT TO BE USED, IN WHOLE OR PART, FOR ANY OTHER PROJECT WITHOUT THE WRITTEN AUTHORIZATION OF CDM SMITH.

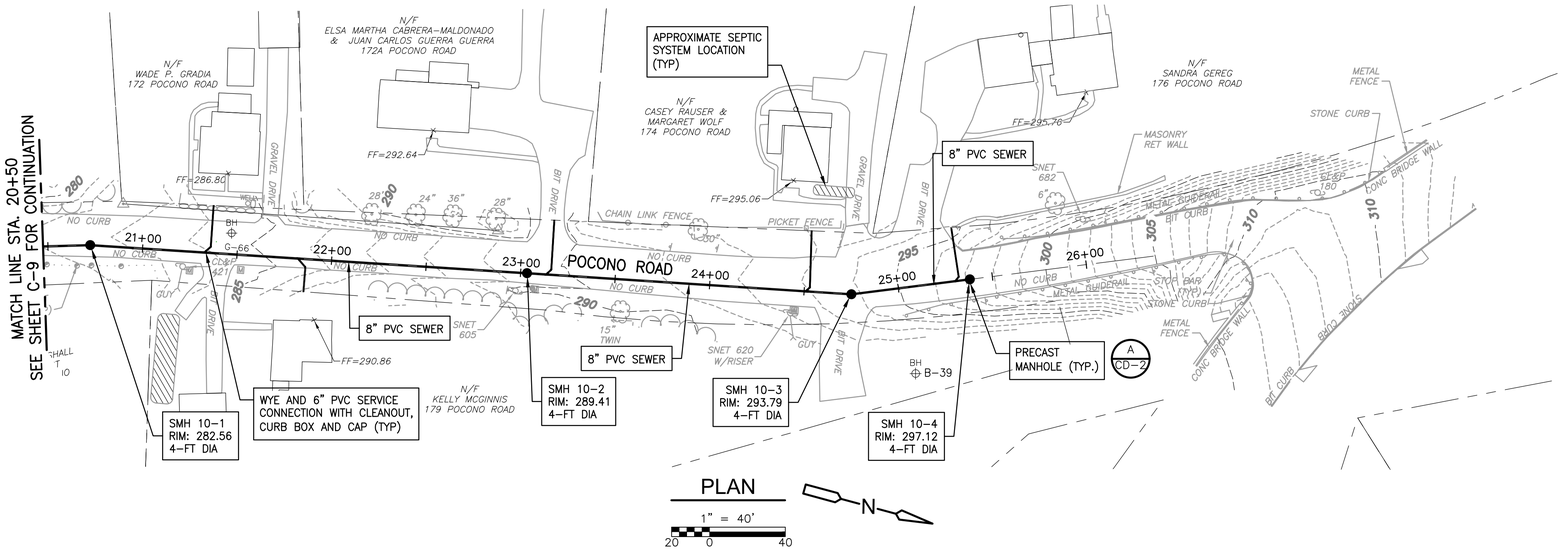

PLAN

1" = 40'

20 0 40

N

NOTES:

1. EXACT LOCATION OF ALL WYES AND SEWER SERVICE CONNECTIONS SHALL BE DETERMINED IN THE FIELD BY CONTRACTOR AND ENGINEER IN CONJUNCTION WITH THE PROPERTY OWNER. ALL LATERAL SERVICE CONNECTIONS SHALL BE INSTALLED WITH A MINIMUM OF 6-FT AND A MAXIMUM OF 8-FT OF COVER AT THE PROPERTY LINE.
2. WORK ON THIS SHEET INCLUDES SOME AREAS OF REGULATED SOILS. REFER TO SPECIFICATION SECTIONS 026110, 028110, AND APPENDIX B.
3. TRENCH-WIDTH PAVEMENT RESTORATION SHALL BE PER DETAIL F/SHEET CD-1.

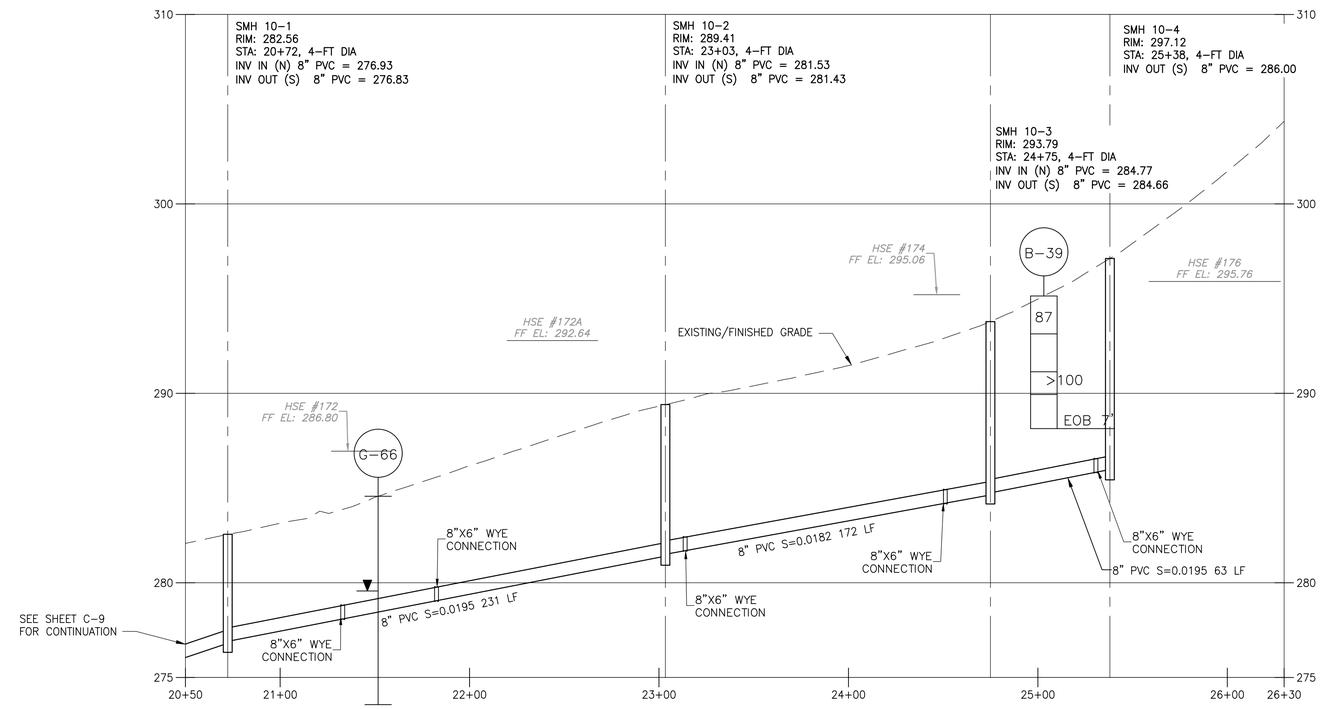

PROFILE

1" = 40' VERT: 1" = 4'

20 0 40 2 0 4

REV. NO.	DATE	DRWN	CHKD	REMARKS

DESIGNED BY: S. SIDANALE
DRAWN BY: S. SIDANALE
SHEET CHK'D BY: K. WAGNER
CROSS CHK'D BY: D. MURPHY
APPROVED BY: K. WAGNER
DATE: APRIL 2026

CDM Smith
101 East River Drive, Suite 1A
East Hartford, CT 06108
Tel: (860) 529-7615

BROOKFIELD, CONNECTICUT

DEAN AND POCONO ROADS
GRAVITY SANITARY SEWER EXTENSION

POCONO ROAD
PLAN AND PROFILE - VI

STATE OF CONNECTICUT
KRISTIE BERSLEY WAGNER
No. 24384
LICENSED
PROFESSIONAL ENGINEER

Digitally signed by Kristie G Wagner
Date: 2026.04.29 15:14:21-04'00'

PROJECT NO. 261865-269061
FILE NAME: CPLPR010.DWG

SHEET NO.
C-10

XREFs: [CEP000SS, CWZ001PP, CDMS_2234, CEP001SS] Images: []
Last saved by: SIDANALESS Time: 2/2/2026 1:31:42 PM
pw:\\cdmsmith-azo2-pw.bentley.com:pw_pll\261865\269061\04 Design Services NM_90ft\02 Civil\10 BIM_CADD\00 DEAN-POCONO\01 Gravity\CPLPR001.dwg
©2026 CDM SMITH ALL RIGHTS RESERVED.
REUSE OF DOCUMENTS: THESE DOCUMENTS AND DESIGNS PROVIDED BY PROFESSIONAL SERVICE, INCORPORATED HEREIN, ARE THE PROPERTY OF CDM SMITH AND ARE NOT TO BE USED, IN WHOLE OR PART, FOR ANY OTHER PROJECT WITHOUT THE WRITTEN AUTHORIZATION OF CDM SMITH.

NOTES:

1. EXACT LOCATION OF ALL WYES AND SEWER SERVICE CONNECTIONS SHALL BE DETERMINED IN THE FIELD BY CONTRACTOR AND ENGINEER IN CONJUNCTION WITH THE PROPERTY OWNER. ALL LATERAL SERVICE CONNECTIONS SHALL BE INSTALLED WITH A MINIMUM OF 6-FT AND A MAXIMUM OF 8-FT OF COVER AT THE PROPERTY LINE.
2. WORK ON THIS SHEET INCLUDES SOME AREAS OF REGULATED SOILS. REFER TO SPECIFICATION SECTIONS 026110, 028110, AND APPENDIX B.
3. REFER TO ELECTRICAL DRAWINGS FOR ELECTRICAL CABINET, PAD, CONDUIT AND WIRING DETAILS.
4. REFER TO STRUCTURAL DRAWINGS FOR GENERATOR PAD.
5. TRENCH-WIDTH PAVEMENT RESTORATION SHALL BE PER DETAIL F/SHEET CD-1.
6. MANHOLES GREATER THAN 20 FEET DEEP SHALL BE PROVIDED WITH SAFETY PLATFORM IN COMPLIANCE WITH OSHA STANDARDS.

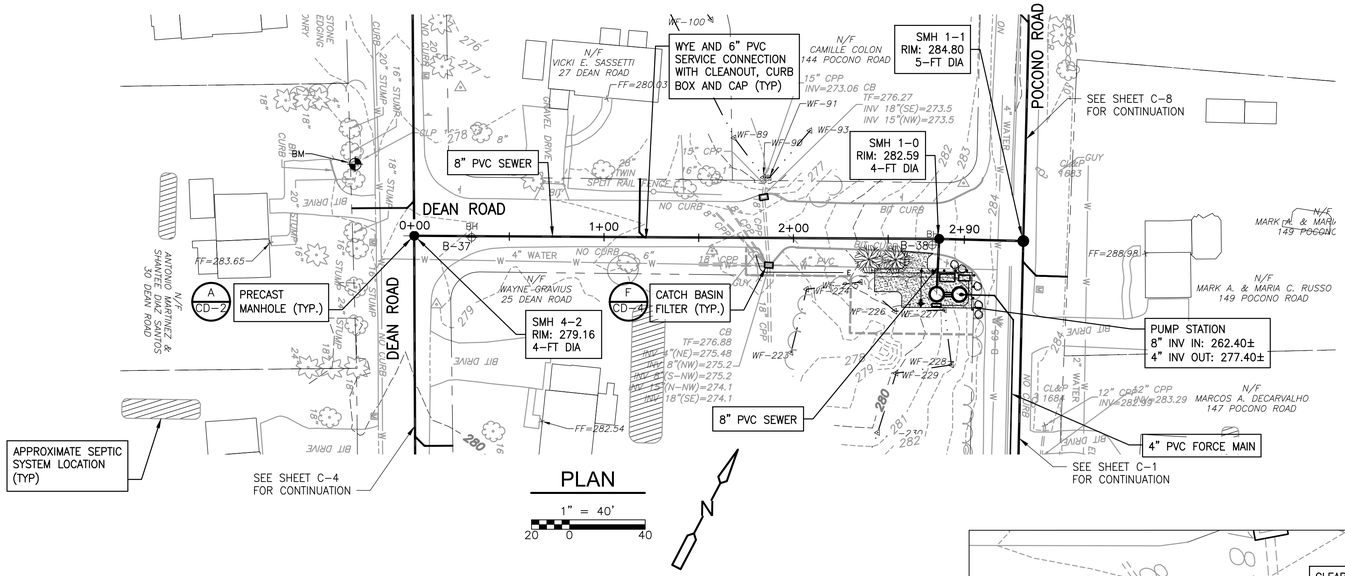

PLAN

1" = 40'

20 0 40

PROFILE

1" = 40' VERT: 1" = 4'

20 0 40 2 0 4

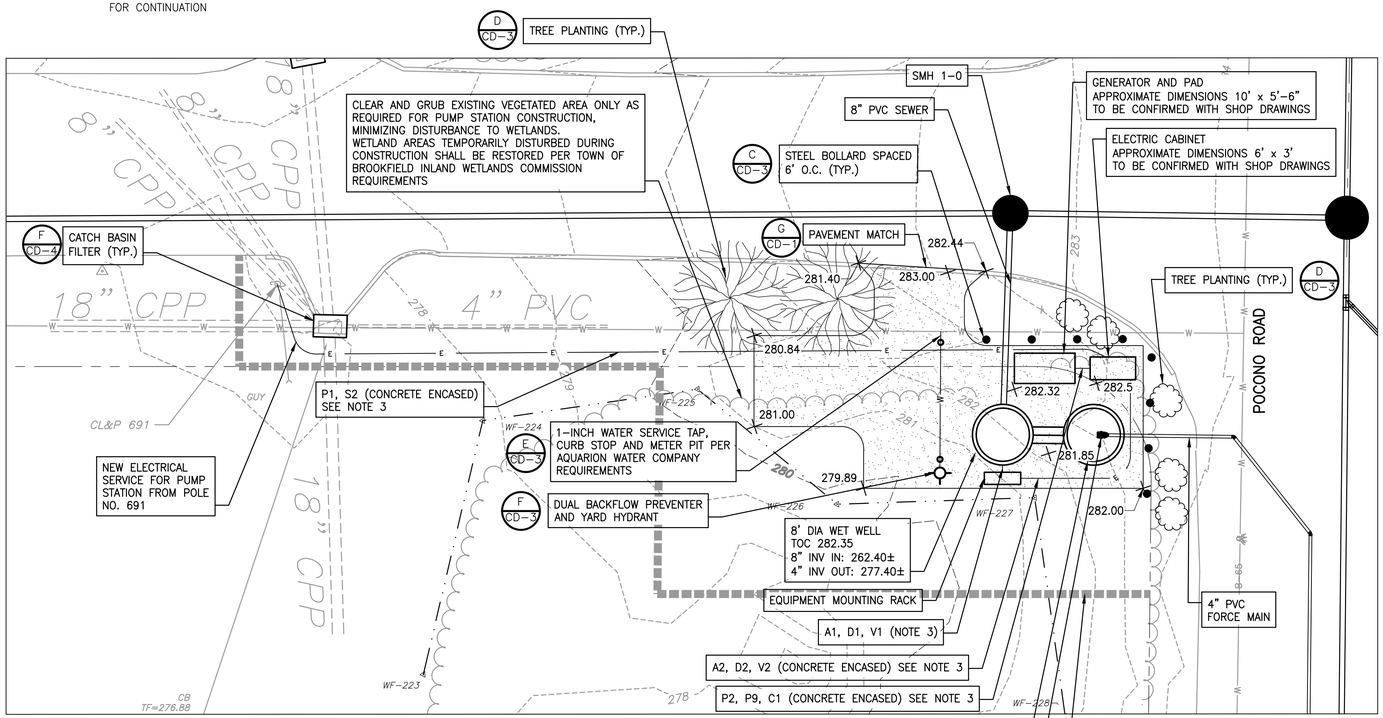

PUMP STATION SITE PLAN

1" = 10'

5 0 10

PUMP STATION SITE LEGEND:

WHITE PINE (PINUS STROBUS)

ARBORVITAE (THUJA OCCIDENTALIS)

BITUMINOUS CONCRETE PAVING - MATCH TOWN ROAD PAVEMENT REQUIREMENTS (F/CD-1)

REV. NO.	DATE	DRWN	CHKD	REMARKS

DESIGNED BY: S. SIDANALE
DRAWN BY: S. SIDANALE
SHEET CHK'D BY: K. WAGNER
CROSS CHK'D BY: D. MURPHY
APPROVED BY: K. WAGNER
DATE: APRIL 2026

CDM Smith
101 East River Drive, Suite 1A
East Hartford, CT 06108
Tel: (860) 529-7615

BROOKFIELD, CONNECTICUT

DEAN AND POCONO ROADS
GRAVITY SANITARY SEWER EXTENSION

DEAN ROAD
PLAN AND PROFILE - IV
AND PUMP STATION SITE PLAN

STATE OF CONNECTICUT
KRISTIE GERSLEY WAGNER
No. 24384
LICENSED PROFESSIONAL ENGINEER

Digitally signed by Kristie G Wagner
Date: 2026.04.29 15:14:30-04'00'

PROJECT NO. 261865-269061
FILE NAME: CPLPR011.DWG

SHEET NO.
C-11

XREFs: [CEP000SS_CWZ001PP_CDMS_2234_CEP001SS] Images: [Wagner Kristie CT PE Stamp]
Last saved by: ENGELSB Time: 4/27/2026 8:55:59 AM
pw:\\cdmsmith-nao02-pw.bentley.com:pw_p01261865\269061\04 Design Services NM_90%\02 Civil\10 BIM_CADD\00 DEAN-POCONO\01 Gravity\CPLPR001.dwg
© 2026 CDM SMITH ALL RIGHTS RESERVED.
REUSE OF DOCUMENTS: THESE DOCUMENTS AND DESIGNS PROVIDED BY PROFESSIONAL SERVICE, INCORPORATED HEREIN, ARE THE PROPERTY OF CDM SMITH AND ARE NOT TO BE USED, IN WHOLE OR PART, FOR ANY OTHER PROJECT WITHOUT THE WRITTEN AUTHORIZATION OF CDM SMITH.

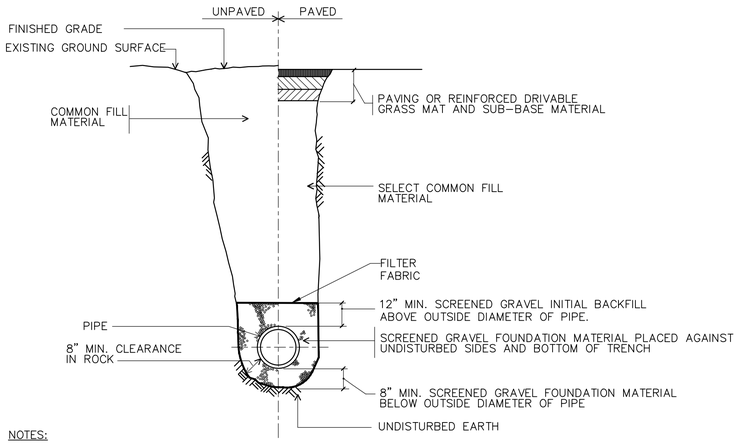

NOTES:

1. TRENCHES LOCATED ON THE ROAD SHOULDER SHALL BE TREATED THE SAME AS STREET EXCEPT FOR PAVING.
2. PROVIDE AT LEAST ONE IMPERVIOUS DAM IN GRAVEL BEDDING BETWEEN EACH MANHOLE OR EVERY 300-FEET, WHICHEVER IS LESS. SEE DETAIL THIS SHEET.
3. FOR PVC FORCE MAIN, SAND SHALL BE USED IN PLACE OF SCREENED GRAVEL AS FOUNDATION MATERIAL AND INITIAL BACKFILL PER BWPCA STANDARDS.

TYPICAL TRENCH FOR PVC SEWER PIPE
DETAIL A — NTS

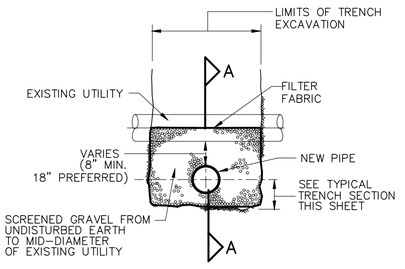

TYPICAL SECTION

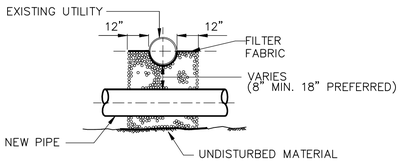

SECT A-A

UTILITY CROSSING
DETAIL B — NTS

DEPTH TO PIPE INVERT (FT)	TRENCH PAVEMENT PAYMENT WIDTH (FT)
< 12	6
12-16	10
>16	14

TRENCH PAVEMENT PAY WIDTH TABLE
DETAIL C — NTS

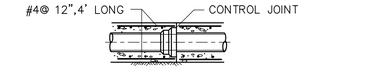

PLAN

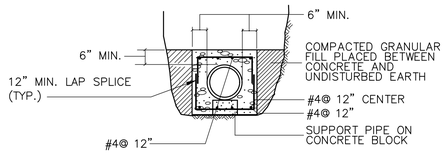

SECTION

NOTES:

1. CONTROL JOINTS AND PIPE JOINTS FOR ARCHES, AND ENCASEMENT SHALL COINCIDE FOR SPACING. MAX.DISTANCE BETWEEN CONTROL JOINTS SHALL BE 24'±
2. REINFORCING STEEL TO BE USED AT TYPE "A" MANHOLES FOR MITERED RC PIPE OPTION. AT OTHER LOCATIONS USE ONLY WHEN DEPTH OF COVER TO TOP OF SURFACE OF CONCRETE IS 5'-0" OR LESS.

CONCRETE PIPE ENCASEMENT
DETAIL D — NTS

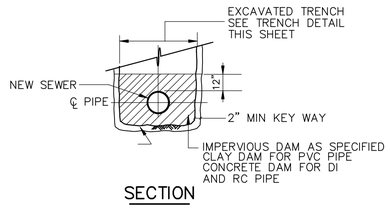

SECTION

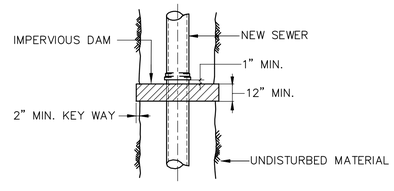

PLAN

NOTE: AT LEAST ONE TRENCH DAM SHALL BE CONSTRUCTED IN EVERY MANHOLE-TO-MANHOLE SEGMENT OR EVERY 300 FEET OF PIPE, WHICHEVER IS LESS

PIPE TRENCH DAM
DETAIL E — NTS

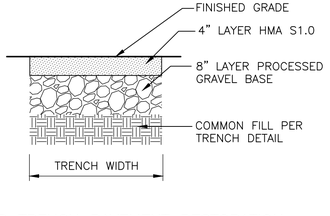

TOWN ROAD TRENCH PAVEMENT RESTORATION
DETAIL F — NTS

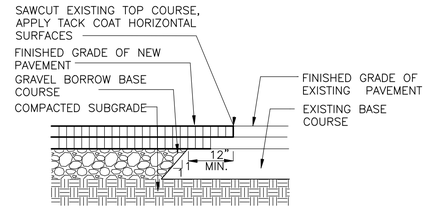

PAVEMENT MATCH
DETAIL G — NTS

XREFs: [CDMS_2234] Images: [Wagner Kristie CT PE Stamp]
Last saved by: ENGELSB Time: 4/27/2026 8:57:57 AM
pw:\\cdmsmith-az02-pw.bentley.com:pw_p01261865\269061\04 Design Services NM_90%\02 Civil\10 BIM_CADD\00 DEAN-POCONO\01 Gravity\CD01STDT.dwg
© 2026 CDM SMITH ALL RIGHTS RESERVED.
REUSE OF DOCUMENTS: THESE DOCUMENTS AND DESIGNS PROVIDED BY PROFESSIONAL SERVICE, INCORPORATED HEREIN, ARE THE PROPERTY OF CDM SMITH AND ARE NOT TO BE USED, IN WHOLE OR PART, FOR ANY OTHER PROJECT WITHOUT THE WRITTEN AUTHORIZATION OF CDM SMITH.

REV. NO.	DATE	DRWN	CHKD	REMARKS

DESIGNED BY: S. SIDANALE
DRAWN BY: S. SIDANALE
SHEET CHK'D BY: K. WAGNER
CROSS CHK'D BY: D. MURPHY
APPROVED BY: K. WAGNER
DATE: APRIL 2026

CDM Smith
101 East River Drive, Suite 1A
East Hartford, CT 06108
Tel: (860) 529-7615

BROOKFIELD, CONNECTICUT

DEAN AND POCONO ROADS
GRAVITY SANITARY SEWER EXTENSION

CIVIL DETAILS I

STATE OF CONNECTICUT — KRISTIE GERBLEY WAGNER — No. 24384 — LICENSED PROFESSIONAL ENGINEER

Digitally signed by Kristie G Wagner
Date: 2026.04.29 15:14:38-04'00'

PROJECT NO. 261865-269061
FILE NAME: CD01STDT.DWG

SHEET NO.
CD-1

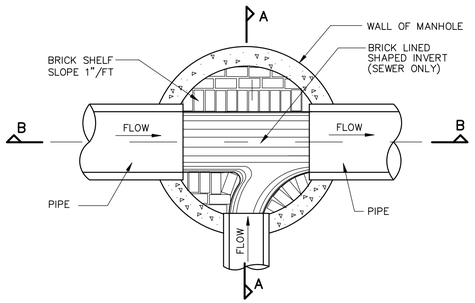

PLAN

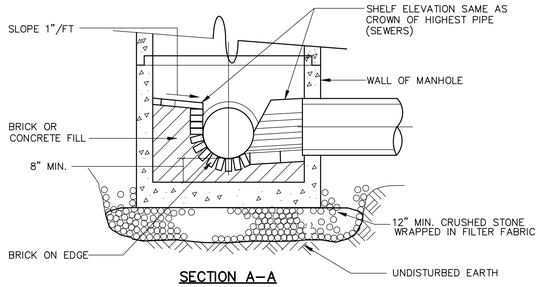

SECTION A–A

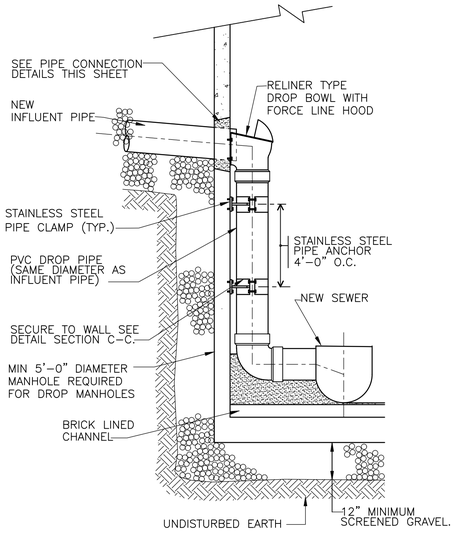

PVC DROP BOWL CONNECTION (INTERNAL)
FOR GRAVITY CONNECTIONS

DETAIL B
NTS –

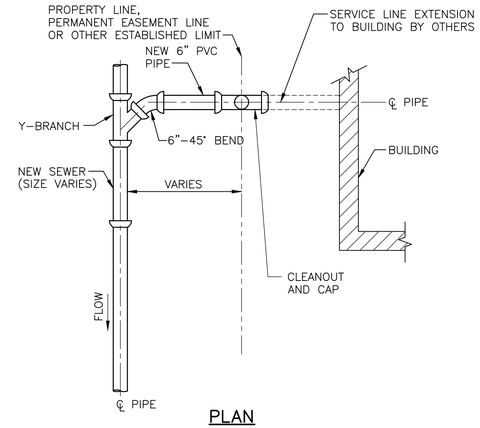

PLAN

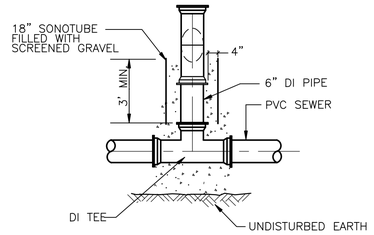

ELEVATION

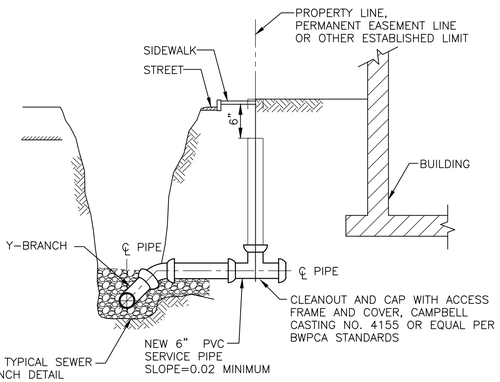

SECTION

SEWER SERVICE CONNECTION

DETAIL D
NTS –

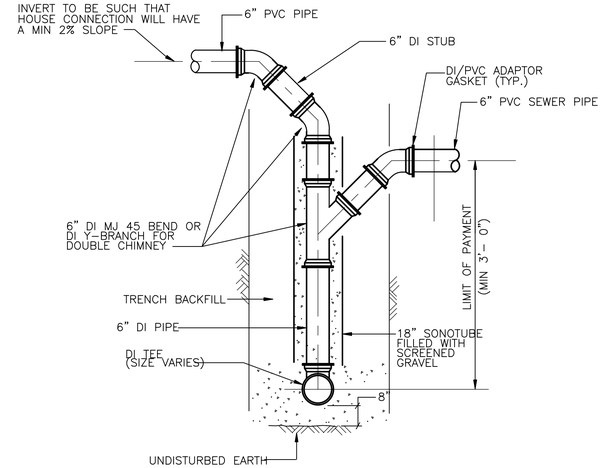

SECTION

DI CHIMNEY

DETAIL E
NTS –

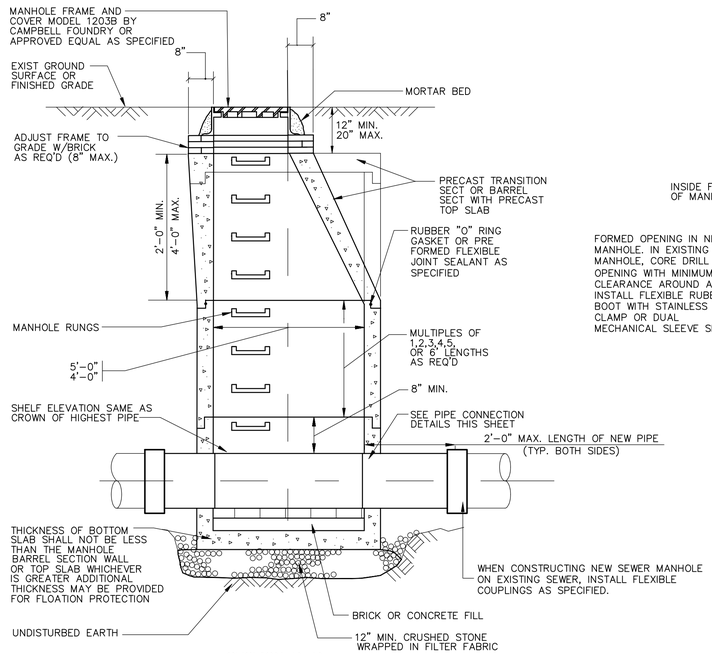

SECTION B–B

NOTE: REFER TO BWPCA STANDARD DETAILS FOR AIR RELEASE VALVE MANHOLE.

TYPICAL PRECAST SEWER MANHOLE

DETAIL A
NTS –

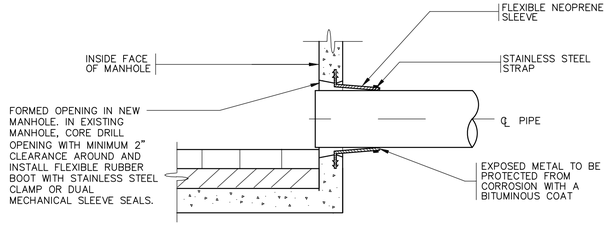

FLEXIBLE SLEEVE

NOTE: REFER TO BWPCA STANDARD DETAILS FOR
FORCE MAIN CONNECTION TO EXISTING MANHOLE

MANHOLES PIPE CONNECTION

DETAIL C
NTS –

XREFs: [CDMS_22341_Images: [Wagner Kristie CT PE Stamp]
Last saved by: ENGELSB Time: 4/27/2026 9:00:09 AM
pw://cdmsmith-s032-pw.bentley.com:pw_pl/1261865/269061/04 Design Services NM_90%/02 Civil/10 BIM_CADD/00 DEAN-POCONO/01 Gravity/CD02STDT.dwg
© 2026 CDM SMITH ALL RIGHTS RESERVED.
REUSE OF DOCUMENTS: THESE DOCUMENTS AND DESIGNS PROVIDED BY PROFESSIONAL SERVICE, INCORPORATED HEREIN, ARE THE PROPERTY OF CDM SMITH AND ARE NOT TO BE USED, IN WHOLE OR PART, FOR ANY OTHER PROJECT WITHOUT THE WRITTEN AUTHORIZATION OF CDM SMITH.

REV. NO.	DATE	DRWN	CHKD	REMARKS

DESIGNED BY: S. SIDANALE
DRAWN BY: S. SIDANALE
SHEET CHK'D BY: K. WAGNER
CROSS CHK'D BY: D. MURPHY
APPROVED BY: K. WAGNER
DATE: APRIL 2026

CDM Smith
101 East River Drive, Suite 1A
East Hartford, CT 06108
Tel: (860) 529-7615

BROOKFIELD, CONNECTICUT

DEAN AND POCONO ROADS
GRAVITY SANITARY SEWER EXTENSION

CIVIL DETAILS II

STATE OF CONNECTICUT · KRISTIE GERSLEY WAGNER · No. 24384 · LICENSED PROFESSIONAL ENGINEER

Digitally signed by Kristie G Wagner
Date: 2026.04.29 15:14:47-04'00'

PROJECT NO. 261865–269061
FILE NAME: CD02STDT.DWG

SHEET NO.
CD-2

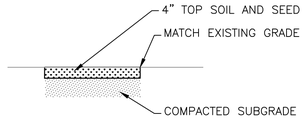

NOTES:

1. RESTORE SURFACE OF AREAS DISTURBED BY WORK AS SHOWN.

UNPAVED SURFACE RESTORATION
DETAIL A
NTS

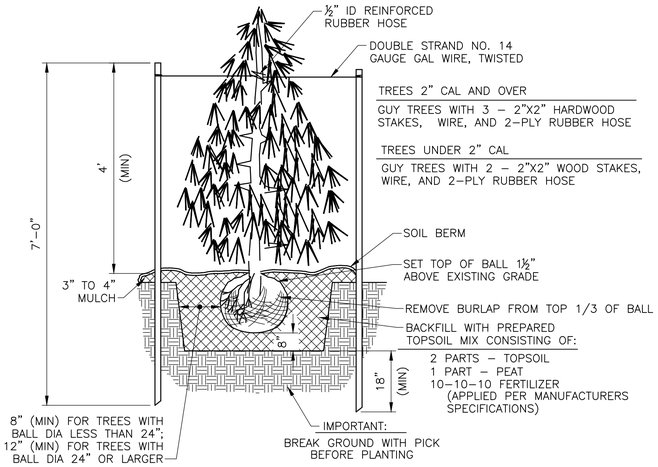

PLANT SPECIFICATIONS:

1. THE TREES SHALL BE EMERALD GREEN ASTER ARBORVITAE (THUJA OCCIDENTALIS), 5–FT MINIMUM HEIGHT, FULL GROWN HEIGHT OF 8 TO 12 FEET, NURSERY GROWN IN A CLIMATE SIMILAR TO THAT OF THE LOCALITY OF THE PROJECT.
2. ALL TREES SHALL HAVE A NORMAL HABIT OF GROWTH AND SHALL BE SOUND, HEALTHY AND VIGOROUS, THEY SHALL BE FREE FROM DISEASE, INSECTS, INSECT EGGS, AND LARVAE.
3. ALL PLANTING SHALL BE PERFORMED IN CONFORMANCE WITH GOOD NURSERY AND LANDSCAPE PRACTICE.
4. REQUIREMENTS FOR THE MEASUREMENTS, BRANCHING, GRADING, QUALITY, BALLING, AND THE BURLAPPING OF TREES SHALL FOLLOW THE CODE OF STANDARDS RECOMMENDED BY THE AMERICAN ASSOCIATION OF NURSERYMEN, INC., IN THE AMERICAN STANDARD FOR NURSERY STOCK, ANSIZ60, CURRENT EDITION, AS AMENDED.

TYPICAL EVERGREEN TREE PLANTING
DETAIL D
NTS

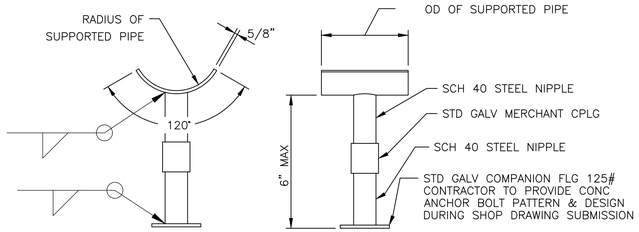

TYPICAL ADJUSTABLE PIPE SUPPORT
DETAIL G
NTS

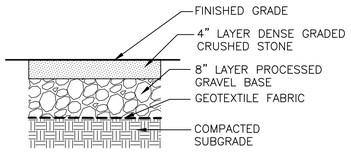

CRUSHED STONE SURFACING
DETAIL B
NTS

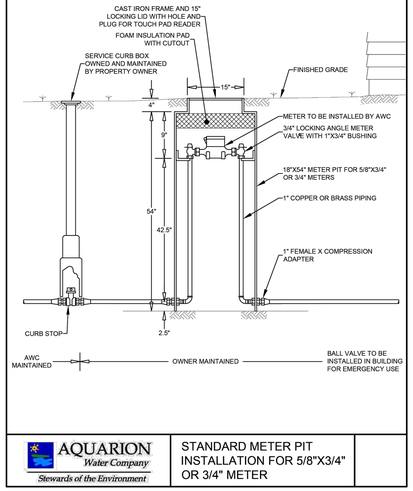

STANDARD METER PIT INSTALLATION
DETAIL E
NTS

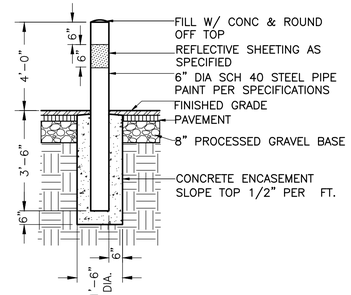

STEEL BOLLARD
DETAIL C
NTS

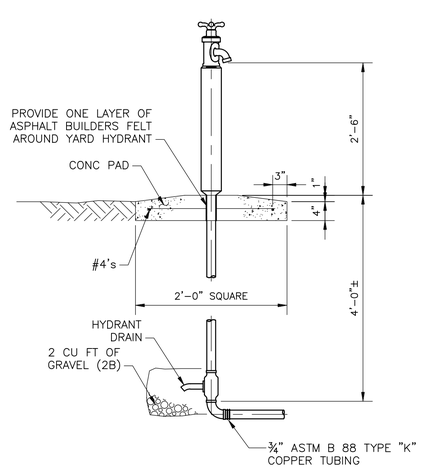

YARD HYDRANT (FROST PROOF)
DETAIL F
NTS

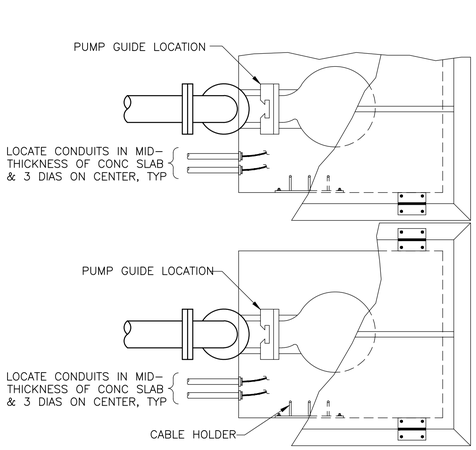

PLAN

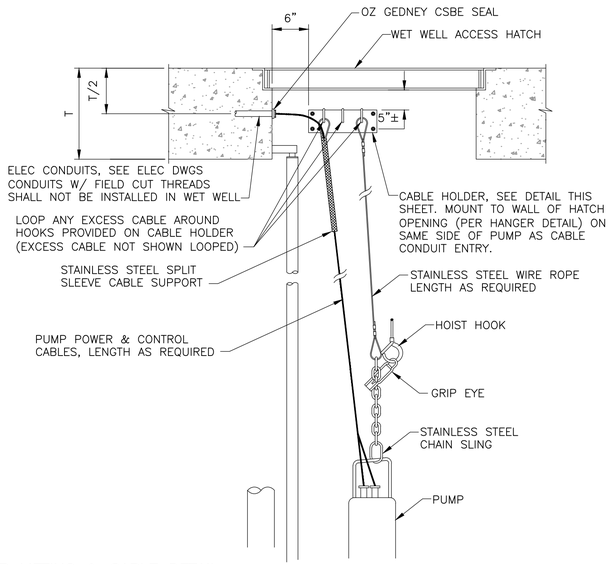

TYPICAL PUMP LIFTING & CABLE DETAIL
DETAIL H
NTS

XREFs: [CDMS_2234] Images: [Wagner Kristie CT PE Stamp]
Last saved by: ENGELSB Time: 4/29/2026 10:00:23 AM
pw:\\cdmsmith-as02-pw.bentley.com:pw_pi\126186526906\104 Design Services NM_90%\02 Civil\10 BIM_CADD\00 DEAN-POCONO\01 Gravity\CD03STDT.dwg
© 2026 CDM SMITH ALL RIGHTS RESERVED.
REUSE OF DOCUMENTS: THESE DOCUMENTS AND DESIGNS PROVIDED BY PROFESSIONAL SERVICE, INCORPORATED HEREIN, ARE THE PROPERTY OF CDM SMITH AND ARE NOT TO BE USED, IN WHOLE OR PART, FOR ANY OTHER PROJECT WITHOUT THE WRITTEN AUTHORIZATION OF CDM SMITH.

REV. NO.	DATE	DRWN	CHKD	REMARKS

DESIGNED BY: S. SIDANALE
DRAWN BY: S. SIDANALE
SHEET CHK'D BY: K. WAGNER
CROSS CHK'D BY: D. MURPHY
APPROVED BY: K. WAGNER
DATE: APRIL 2026

CDM Smith
101 East River Drive, Suite 1A
East Hartford, CT 06108
Tel: (860) 529-7615

BROOKFIELD, CONNECTICUT

DEAN AND POCONO ROADS
GRAVITY SANITARY SEWER EXTENSION

CIVIL DETAILS III

STATE OF CONNECTICUT · KRISTIE BERSLEY WAGNER · No. 24384 · LICENSED PROFESSIONAL ENGINEER

Digitally signed by Kristie G Wagner
Date: 2026.04.29 15:14:55-04'00'

PROJECT NO. 261865–269061
FILE NAME: CD03STDT.DWG

SHEET NO.
CD-3

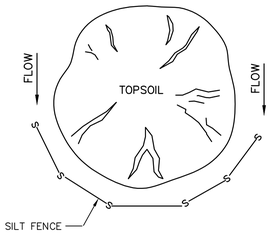

NOTES:

1) A STOCKPILE SHALL BE USED TO CONTAIN ALL STRIPPED TOPSOIL IN A LIMITED AREA IN ORDER TO KEEP DISTURBANCE TO A MINIMUM.
2) STOCKPILES ARE TO BE STABILIZED IMMEDIATELY.
3) STOCKPILE HEIGHTS MUST NOT EXCEED 35 FEET.
4) STOCKPILE SLOPES MUST BE 2:1 OR FLATTER.
5) STOCKPILES SHALL BE LOCATED SO THAT ALL SWALES CAN FUNCTION AS DESIGNED.

TOPSOIL STOCKPILE
DETAIL A
NTS

Filtrexx® FilterSoxx™

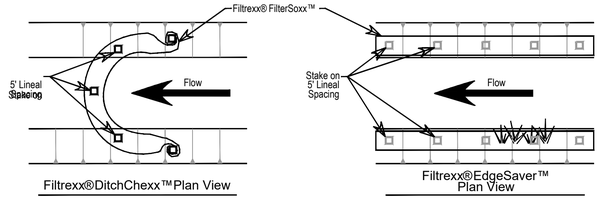

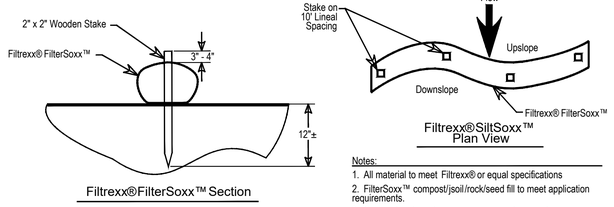

Notes:
1. All material to meet Filtrexx® or equal specifications
2. FilterSoxx™ compost/jsoil/rock/seed fill to meet application requirements.
3. Compost material to be dispersed on site, as determined by Engineer.
4. Composite Filter Sock to be installed at pump station site and at other locations where siltation is a potential concern as directed by Engineer or Town of Brookfield

COMPOSITE FILTER SOCK
DETAIL B
NTS

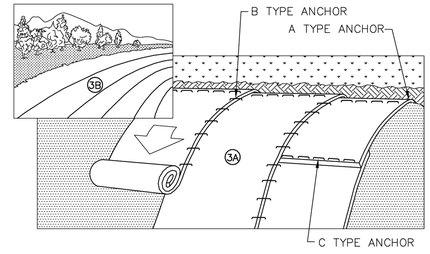

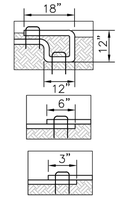

A TYPE ANCHOR
(TOP OF SLOPE/CREST, TERMINATION OF MAT)

B TYPE ANCHOR
(LENGTH OF OVERLAP)

C TYPE ANCHOR
(WIDTH OF OVERLAP)

NOTES:

1. INSTALL EROSION CONTROL MATTING ON ALL SLOPES OF 6:1 (H:V) OR STEEPER IN ACCORDANCE WITH MANUFACTURER'S RECOMMENDATIONS.
2. PREPARE SOIL BEFORE INSTALLATION OF MATTING, INCLUDING FERITILIZER AND SEED.
3. ROLL THE MAT (A) DOWN OR (B) HORIZONTALLY ACROSS THE SLOPE WITH STAPLES.
4. STAPLES SHALL BE A MINIMUM 6" LONG AND SPACED APPROXIMATELY 12" APART.

EROSION CONTROL MATTING
DETAIL C
NTS

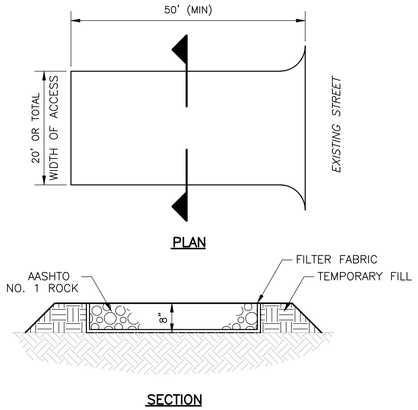

ROCK CONSTRUCTION ENTRANCE
DETAIL D
NTS

NOTES:

1. ROCK CONSTRUCTION ENTRANCE THICKNESS SHALL BE CONSTANTLY MAINTAINED TO THE SPECIFIED DIMENSIONS BY ADDING ROCK. A STOCKPILE SHALL BE MAINTAINED ON SITE FOR THIS PURPOSE. AT THE END OF EACH CONSTRUCTION DAY, ALL SEDIMENT DEPOSITED ON PAVED ROADWAYS SHALL BE REMOVED AND RETURNED TO THE CONSTRUCTION SITE.
2. ROCK CONSTRUCTION ENTRANCE TO BE INSTALLED AT PUMP STATION SITE AND CONTRACTOR STAGING/STOCKPILING AREA AND MAINTAINED THROUGHOUT THE DURATION OF CONSTRUCTION.

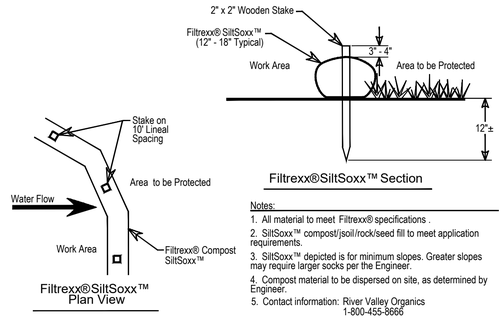

Notes:
1. All material to meet Filtrexx® specifications .
2. SiltSoxx™ compost/jsoil/rock/seed fill to meet application requirements.
3. SiltSoxx™ depicted is for minimum slopes. Greater slopes may require larger socks per the Engineer.
4. Compost material to be dispersed on site, as determined by Engineer.
5. Contact information: River Valley Organics 1-800-455-8666

COMPOSITE FILTER SOCK STACKING
DETAIL E
NTS

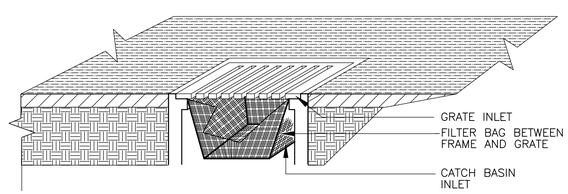

NOTE: CATCH BASIN FILTERS TO BE INSTALLED IN EVERY CATCH BASIN IN DISTURBED AREA AND MAINTAINED THROUGHOUT THE DURATION OF CONSTRUCTION.

CATCH BASIN FILTER
DETAIL F
NTS

XREFs: [CDMS_2234] Images: [Wagner Kristie CT PE Stamp]
Last saved by: ENGELSB Time: 4/27/2026 9:02:04 AM
pw:\\cdmsmith-as02-pw.bentley.com:prjc_pl\1261865\269061\04 Design Services NM_90%\02 Civil\10 BIM_CADD\00 DEAN-POCONO\01 Gravity\CD04STDT.dwg
© 2026 CDM SMITH ALL RIGHTS RESERVED.
REUSE OF DOCUMENTS: THESE DOCUMENTS AND DESIGNS PROVIDED BY PROFESSIONAL SERVICE, INCORPORATED HEREIN, ARE THE PROPERTY OF CDM SMITH AND ARE NOT TO BE USED, IN WHOLE OR PART, FOR ANY OTHER PROJECT WITHOUT THE WRITTEN AUTHORIZATION OF CDM SMITH.

REV. NO.	DATE	DRWN	CHKD	REMARKS

DESIGNED BY: S. SIDANALE
DRAWN BY: S. SIDANALE
SHEET CHK'D BY: K. WAGNER
CROSS CHK'D BY: D. MURPHY
APPROVED BY: K. WAGNER
DATE: APRIL 2026

CDM Smith
101 East River Drive, Suite 1A
East Hartford, CT 06108
Tel: (860) 529-7615

BROOKFIELD, CONNECTICUT

DEAN AND POCONO ROADS
GRAVITY SANITARY SEWER EXTENSION

CIVIL DETAILS IV

STATE OF CONNECTICUT · KRISTIE GERSLEY-WAGNER · No. 24384 · LICENSED PROFESSIONAL ENGINEER

Digitally signed by Kristie G Wagner
Date: 2026.04.29 15:15:04-04'00'

PROJECT NO. 261865-269061
FILE NAME: CD04STDT.DWG

SHEET NO.
CD-4

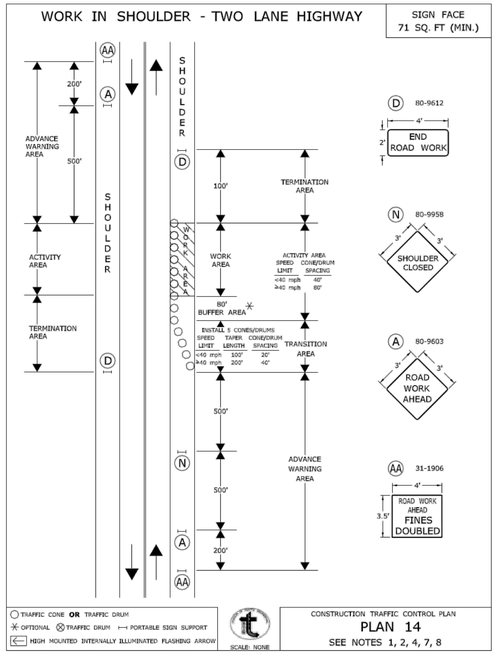

ITEM #971001A

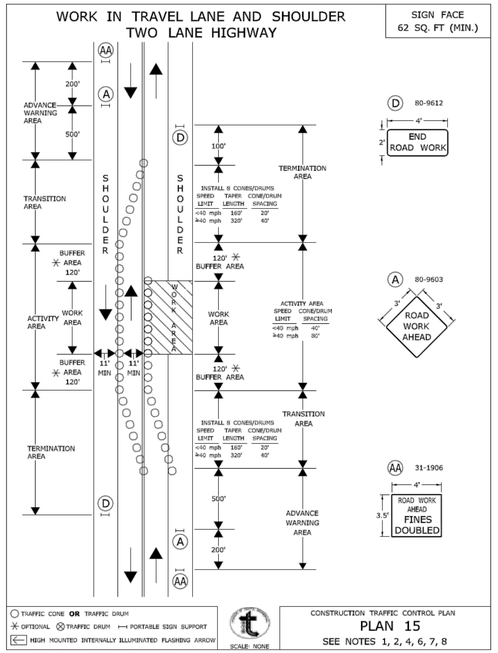

ITEM #971001A

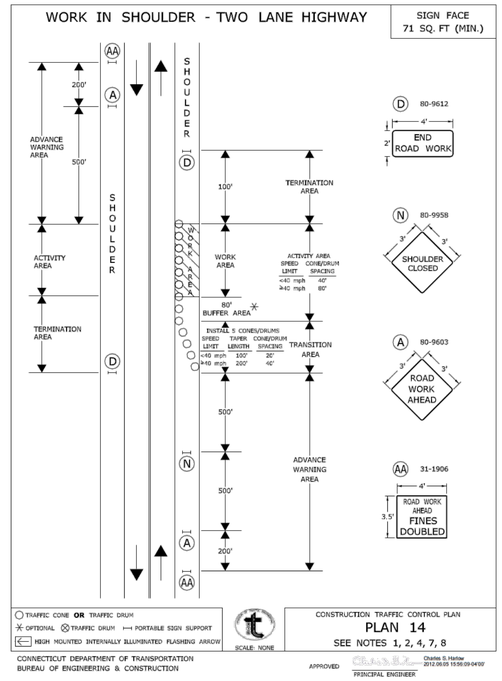

ITEM #971001A

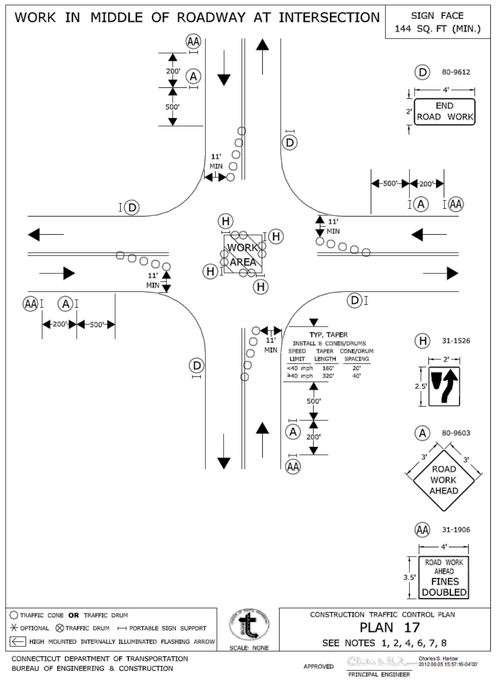

ITEM #971001A

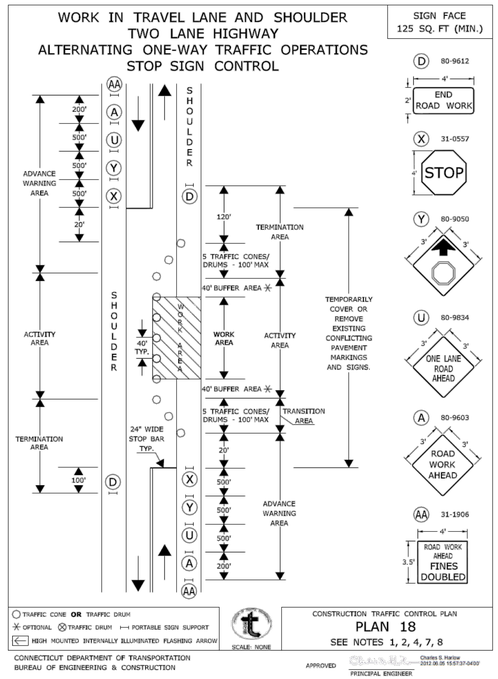

ITEM #971001A

NOTE:
DETAILS THIS SHEET ARE STANDARD DETAILS FROM CT DOT AND INTENDED AS REFERENCE FOR BEST PRACTICES FOR TRAFFIC MANAGEMENT DURING WORK IN SHOULDERS OR TRAVEL WAYS.

ALL TRAFFIC CONTROL MEASURES AND POLICING SHALL BE AS REQUIRED BY TOWN OF BROOKFIELD POLICE DEPARTMENT.

XREFs: [CDMS_2234], Images: [Wagner Kristie CT PE Stamp]
Last saved by: ENGELSB Time: 4/27/2026 9:04:19 AM
pw:\\cdmsmith-as02-pw.bentley.com:pw_pl\126186526\d0106104 Design Services NM_909\02 Civil\10 BIM_CADD\00 DEAN-POCONO\01 Gravity\TM01PLDT.dwg
© 2026 CDM SMITH ALL RIGHTS RESERVED.
REUSE OF DOCUMENTS: THESE DOCUMENTS AND DESIGNS PROVIDED BY PROFESSIONAL SERVICE, INCORPORATED HEREIN, ARE THE PROPERTY OF CDM SMITH AND ARE NOT TO BE USED, IN WHOLE OR PART, FOR ANY OTHER PROJECT WITHOUT THE WRITTEN AUTHORIZATION OF CDM SMITH.

REV. NO.	DATE	DRWN	CHKD	REMARKS

DESIGNED BY: S. SIDANALE
DRAWN BY: A. WELDON
SHEET CHK'D BY: K. WAGNER
CROSS CHK'D BY: D. MURPHY
APPROVED BY: K. WAGNER
DATE: APRIL 2026

CDM Smith
101 East River Drive, Suite 1A
East Hartford, CT 06108
Tel: (860) 529-7615

BROOKFIELD, CONNECTICUT

DEAN AND POCONO ROADS
GRAVITY SANITARY SEWER EXTENSION

TRAFFIC MANAGEMENT DETAILS

STATE OF CONNECTICUT * KRISTIE GERSLEY WAGNER * No. 24384 * LICENSED PROFESSIONAL ENGINEER *

Digitally signed by Kristie G Wagner
Date: 2026.04.29 15:15:15-04'00'

PROJECT NO. 261865-269061
FILE NAME: TM01PLDT.DWG

SHEET NO.
TM-1

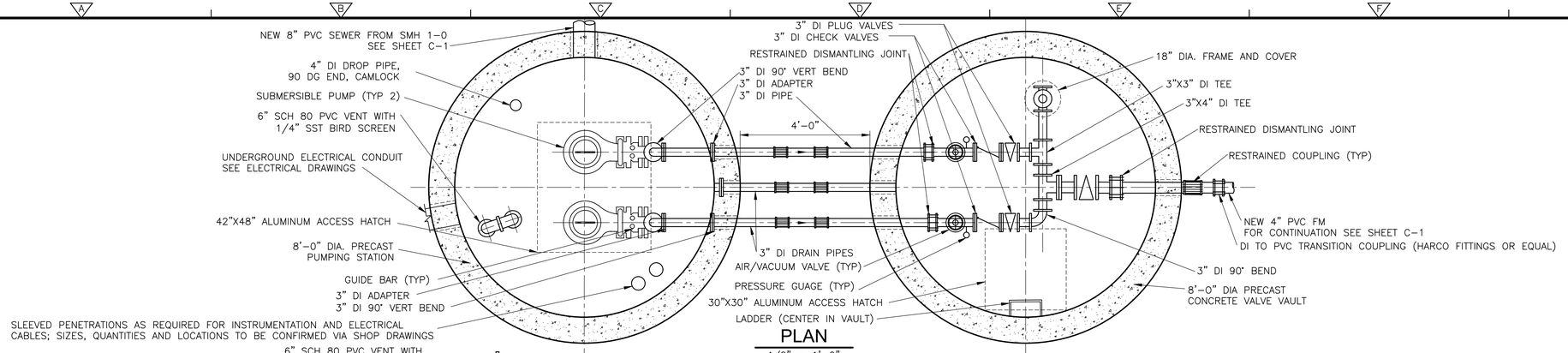

PLAN

1/2" = 1'-0"

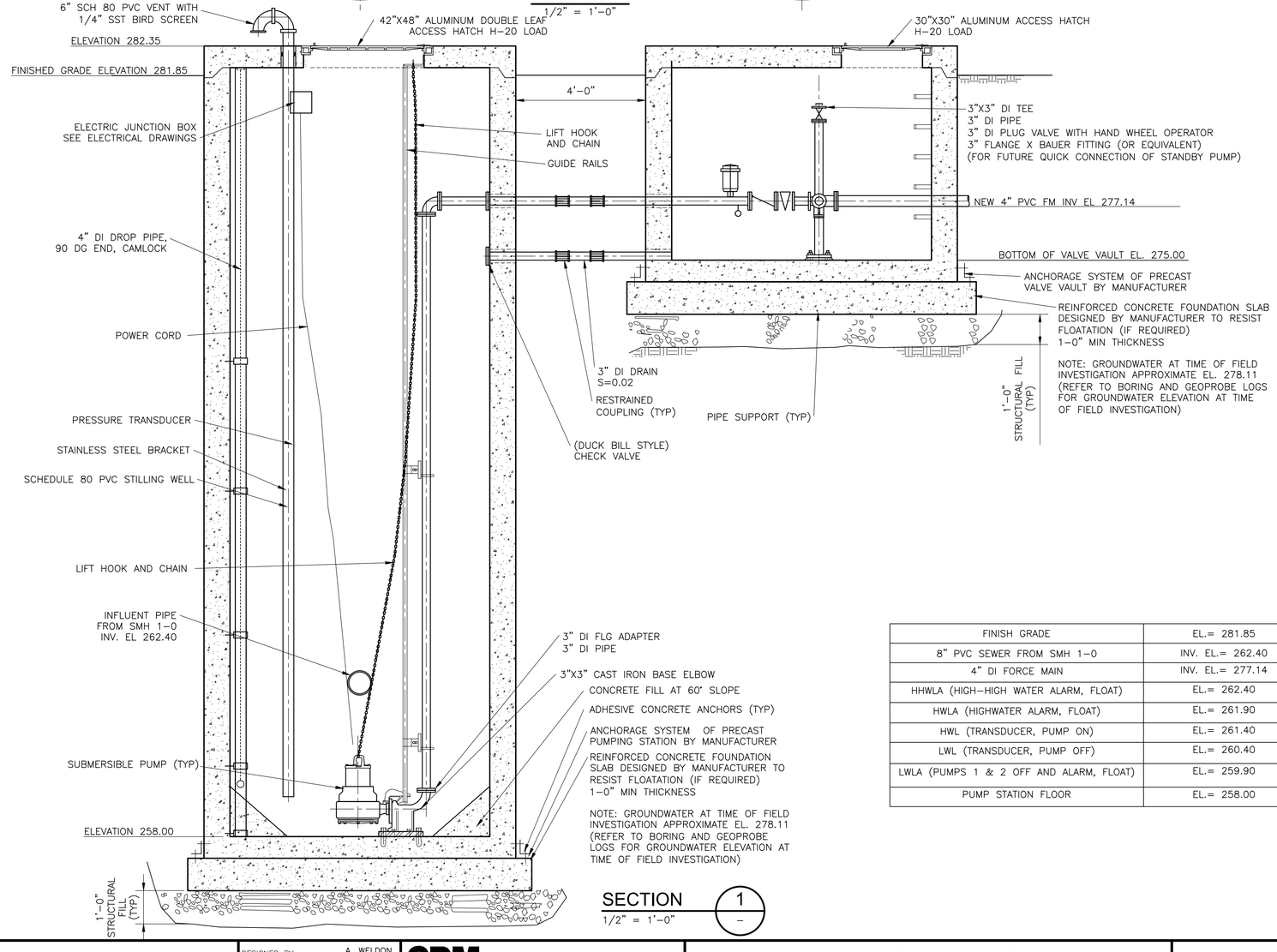

SECTION 1

1/2" = 1'-0"

FINISH GRADE	EL.= 281.85
8" PVC SEWER FROM SMH 1-0	INV. EL.= 262.40
4" DI FORCE MAIN	INV. EL.= 277.14
HHWLA (HIGH-HIGH WATER ALARM, FLOAT)	EL.= 262.40
HWLA (HIGHWATER ALARM, FLOAT)	EL.= 261.90
HWL (TRANSDUCER, PUMP ON)	EL.= 261.40
LWL (TRANSDUCER, PUMP OFF)	EL.= 260.40
LWLA (PUMPS 1 & 2 OFF AND ALARM, FLOAT)	EL.= 259.90
PUMP STATION FLOOR	EL.= 258.00

1/2" = 1'- 0"

1 0 1 2

XREFs: [CDMS_2234] Images: [Wagner Kristie CT PE Stamp]
Last saved by: ENGELSB Time: 4/28/2026 12:13:58 PM
pw://cdmsmith-a032-pw.bentley.com:pw_d/12616965/269061/04 Design Services NM_90%/05 Process Mechanical/10 BIM_CADD/00 DEAN-POCONO/M001PSPS.dwg
© 2026 CDM SMITH ALL RIGHTS RESERVED.
REUSE OF DOCUMENTS: THESE DOCUMENTS AND DESIGNS PROVIDED BY PROFESSIONAL SERVICE, INCORPORATED HEREIN, ARE THE PROPERTY OF CDM SMITH AND ARE NOT TO BE USED, IN WHOLE OR PART, FOR ANY OTHER PROJECT WITHOUT THE WRITTEN AUTHORIZATION OF CDM SMITH.

REV. NO.	DATE	DRWN	CHKD	REMARKS

DESIGNED BY: A. WELDON
DRAWN BY: A. WELDON
SHEET CHK'D BY: K. WAGNER
CROSS CHK'D BY: D. MURPHY
APPROVED BY: K. WAGNER
DATE: APRIL 2026

CDM Smith
101 East River Drive, Suite 1A
East Hartford, CT 06108
Tel: (860) 529-7615

BROOKFIELD, CONNECTICUT

DEAN AND POCONO ROADS
GRAVITY SANITARY SEWER EXTENSION

DEAN ROAD PUMPING STATION
PLAN AND SECTION

STATE OF CONNECTICUT
KRISTIE GERSLEY WAGNER
No. 24284
LICENSED PROFESSIONAL ENGINEER

Digitally signed by Kristie G Wagner
Date: 2026.04.29 15:15:24-04'00'

PROJECT NO. 261865-269061
FILE NAME: M001PSPS.DWG

SHEET NO.
M-1

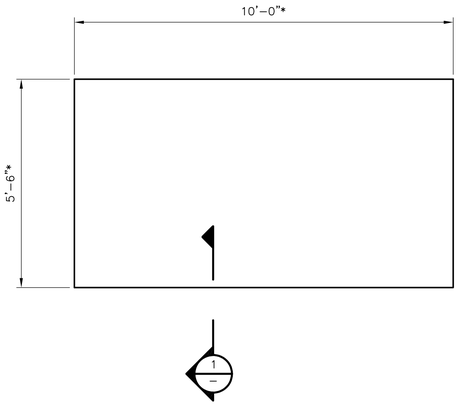

SEE FOUNDATION NOTE 1

GENERATOR FOUNDATION PLAN

1/2"=1'-0"

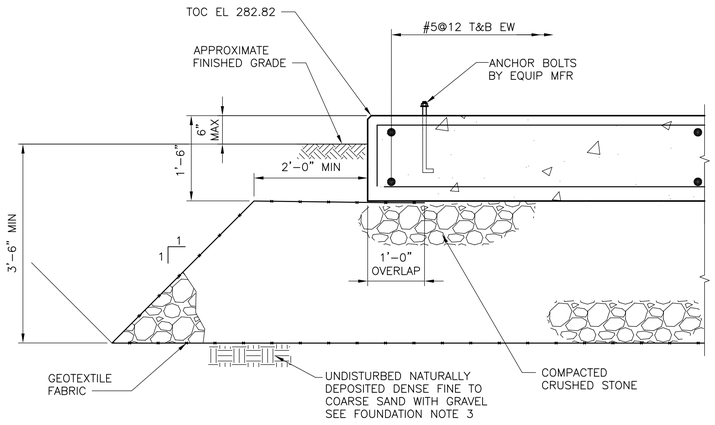

SECTION 1

3/4"=1'-0"

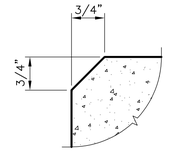

CHAMFER

NTS

GENERAL NOTES:

1. THIS DRAWING SHALL BE USED IN CONJUNCTION WITH THE CIVIL AND ELECTRICAL DRAWINGS, APPROVED SHOP DRAWINGS, AND SPECIFICATIONS.
2. SEE ELECTRICAL DRAWINGS AND THE APPROVED SHOP DRAWINGS FOR REGLETS, CONDUITS OR OTHER ITEMS TO BE EMBEDDED OR PASSED THROUGH THE CONCRETE.
3. * INDICATES DIMENSIONS AND/OR INFORMATION TO BE COORDINATED BY THE CONTRACTOR WITH THE MANUFACTURER OF THE APPROVED EQUIPMENT PRIOR TO FABRICATION AND CONSTRUCTION.

FOUNDATION NOTES:

1. GENERATOR FOUNDATION SHALL NOT BE FABRICATED OR CONSTRUCTED UNTIL THE EQUIPMENT LOADS AND DIMENSIONS HAVE BEEN SUBMITTED, AND ADJUSTMENTS TO THE FOUNDATION DETAILS, IF REQUIRED, HAVE BEEN COMPLETED BY THE ENGINEER.
2. FOR FOUNDATION LOCATION AND ORIENTATION SEE CIVIL DRAWINGS.
3. ENGINEER TO VERIFY SUITABILITY OF EXISTING SUBGRADE SOILS FOR THE ANTICIPATED FOUNDATION PRIOR TO CONTRACTOR PLACING BASE MATERIALS IN ACCORDANCE WITH SPECIFICATION.
4. ALLOWABLE BEARING PRESSURE: 4000 PSF

CAST IN PLACE CONCRETE NOTES:

1. REINFORCED CONCRETE SHALL COMPLY WITH ACI 318.
2. MINIMUM CONCRETE STRENGTH AT 28 DAYS:
   - STRUCTURAL CONCRETE: f'c = 4000 psi
   - ELECTRICAL RACEWAY ENCASEMENT, CONCRETE FILL: f'c = 2500 psi
3. REINFORCING STEEL SHALL BE NEW STEEL CONFORMING TO ASTM SPECIFICATION A615 GRADE 60.
4. REINFORCING STEEL FABRICATION SHALL BE IN COMPLIANCE WITH THE CRSI MANUAL OF STANDARD PRACTICE.
5. REINFORCING STEEL SHALL HAVE THE FOLLOWING CLEAR CONCRETE COVER UNLESS OTHERWISE NOTED:
   - CONCRETE CAST AGAINST AND PERMANENTLY EXPOSED TO EARTH: 3"
   - ALL OTHER CONCRETE SURFACES: 2"
6. SIZE, LOCATION, AND EMBEDMENT OF ANCHOR BOLTS SHALL BE AS REQUIRED BY THE EQUIPMENT MANUFACTURER.
7. ALL EXPOSED CORNERS OF CONCRETE SHALL HAVE 3/4" CHAMFER UNLESS OTHERWISE NOTED.



Digitally signed by Kevin Gallerie
Date: 2026.04.28 14:23:01-04'00'

REV. NO.	DATE	DRWN	CHKD	REMARKS

DESIGNED BY: G. TERANDO
DRAWN BY: J. McCORMACK
SHEET CHK'D BY: G. TERANDO
CROSS CHK'D BY: K. WAGNER
APPROVED BY: K. GALLERIE
DATE: APRIL 2026

CDM Smith
101 East River Drive, Suite 1A
East Hartford, CT 06108
Tel: (860) 529-7615

BROOKFIELD, CONNECTICUT

DEAN AND POCONO ROADS
GRAVITY SANITARY SEWER EXTENSION

GENERATOR FOUNDATION
PLAN, SECTIONS & DETAILS

PROJECT NO. 261865-269061
FILE NAME: S001GFPL.DWG

SHEET NO.
S-1

pw:\\cdmsmith-az02-pw.bentley.com:PW_PL1\80744\292517\04 Design Services NM_Conformed\04 Structural\10 CADD\S001GFPL.dwg
© 2026 CDM SMITH ALL RIGHTS RESERVED.
REUSE OF DOCUMENTS: THESE DOCUMENTS AND DESIGNS PROVIDED BY PROFESSIONAL SERVICE, INCORPORATED HEREIN, ARE THE PROPERTY OF CDM SMITH AND ARE NOT TO BE USED, IN WHOLE OR PART, FOR ANY OTHER PROJECT WITHOUT THE WRITTEN AUTHORIZATION OF CDM SMITH.

SCHEDULE OF SPECIAL INSPECTIONS AND TESTS

NOTES:

1. THIS DRAWING IS PROVIDED TO OUTLINE THE MINIMUM LEVEL OF SPECIAL INSPECTIONS AND TESTS REQUIRED DURING CONSTRUCTION TO ENSURE CONFORMANCE TO THE REQUIREMENTS OF THE CONTRACT DOCUMENTS. A STATEMENT OF SPECIAL INSPECTIONS WILL BE PREPARED BY A REGISTERED DESIGN PROFESSIONAL AND SUBMITTED WITH THE BUILDING PERMIT APPLICATION.

2. SPECIAL INSPECTIONS AND TESTS WILL BE CONDUCTED IN ACCORDANCE WITH THE REQUIREMENTS SET FORTH IN CHAPTER 17 OF THE INTERNATIONAL BUILDING CODE (IBC) AND CHAPTER 17 OF THE CONNECTICUT STATE BUILDING CODE.

3. IN ACCORDANCE WITH THE REQUIREMENTS OF CHAPTER 17 OF THE INTERNATIONAL BUILDING CODE AND CHAPTER 17 OF THE CONNECTICUT STATE BUILDING CODE, THE OWNER WILL PROVIDE A SPECIAL INSPECTOR (AN APPROVED AGENCY OR AGENCIES, INDEPENDENT FROM THE CONTRACTOR AND EMPLOYING QUALIFIED PERSONNEL) TO PERFORM SPECIAL INSPECTIONS AND TESTS IDENTIFIED IN THE STATEMENT OF SPECIAL INSPECTIONS. THE SPECIAL INSPECTOR WILL FURNISH INSPECTION AND TEST REPORTS TO THE REGISTERED DESIGN PROFESSIONAL IN RESPONSIBLE CHARGE AND TO THE BUILDING OFFICIAL.

4. SPECIAL INSPECTIONS AND TESTS SHALL NOT RELIEVE THE CONTRACTOR OF RESPONSIBILITY FOR QUALITY CONTROL OF THE WORK OR FOR CONFORMANCE TO THE REQUIREMENTS OF THE CONTRACT DOCUMENTS. DETECTION, OR FAILURE TO DETECT, DEFECTS IN THE WORK SHALL NOT RELIEVE THE CONTRACTOR OF RESPONSIBILITY TO CORRECT ALL DEFECTS IN THE WORK, WHETHER DETECTED OR NOT, AND OF RESPONSIBILITY FOR CONFORMANCE TO THE REQUIREMENTS OF THE CONTRACT DOCUMENTS.

5. CONTRACTOR SHALL REMOVE AND REPLACE, OR REPAIR, DEFECTS IN THE WORK AND WORK NOT IN CONFORMANCE WITH THE REQUIREMENTS OF THE CONTRACT DOCUMENTS AT NO ADDITIONAL COST TO THE OWNER. CONTRACTOR SHALL BEAR THE COSTS FOR THE INSPECTION AND/OR TEST OF ANY REPLACED OR REPAIRED PORTIONS OF THE WORK.

6. CONTRACTOR SHALL COOPERATE WITH SPECIAL INSPECTIONS AND TESTS BY PROVIDING SUFFICIENT NOTICE FOR THE SCHEDULING OF PERSONNEL AND BY ALLOWING FREE AND SAFE ACCESS TO THE WORK FOR OBSERVATION, VERIFICATION, SAMPLING AND INSPECTION. PROVIDE AND PERMIT THE USE OF LADDERS, SCAFFOLDING, INCIDENTAL EQUIPMENT, AND SAFETY EQUIPMENT AS MAY BE REQUIRED TO CONDUCT SPECIAL INSPECTIONS AND TESTS. ALL SUCH PROVISIONS FOR FREE AND SAFE ACCESS AND EQUIPMENT SHALL BE SAFE, IN GOOD WORKING CONDITION, AND ERECTED, MAINTAINED, AND HANDLED BY QUALIFIED PERSONNEL.

7. SPECIAL INSPECTIONS AND TESTS DO NOT APPLY TO CONTRACTOR'S EQUIPMENT, TEMPORARY STRUCTURES USED FOR CONSTRUCTION, MEANS AND METHODS OF CONSTRUCTION, OR SITE SAFETY. CONTRACTOR SHALL REMAIN RESPONSIBLE FOR ADEQUACY AND SAFETY OF EQUIPMENT, TEMPORARY STRUCTURES USED FOR CONSTRUCTION, MEANS AND METHODS OF CONSTRUCTION AND SITE SAFETY.

TABLE 1 – REQUIRED SPECIAL INSPECTIONS AND TESTS OF SOILS (IBC, TABLE 1705.6)

TYPE	IBC REFERENCE	INSPECTION FREQUENCY		REFERENCE STANDARD
		CONTINUOUS	PERIODIC	
VERIFY MATERIALS BELOW ALL FOUNDATIONS ARE ADEQUATE TO ACHIEVE THE DESIGN BEARING CAPACITY	1705.6		X	CONTRACT DOCUMENTS
VERIFY EXCAVATIONS ARE EXTENDED TO PROPER DEPTH AND HAVE REACHED PROPER MATERIAL	1705.6		X	
PERFORM CLASSIFICATION AND TESTING OF COMPACTED FILL MATERIALS	1705.6		X	
DURING FILL PLACEMENT, VERIFY USE OF PROPER MATERIALS, AND PROCEDURES IN ACCORDANCE WITH THE PROVISIONS OF THE APPROVED GEOTECHNICAL REPORT, DENSITIES, AND LIFT THICKNESS DURING PLACEMENT AND COMPACTION OF COMPACTED FILL	1705.6	X		
PRIOR TO PLACEMENT OF COMPACTED FILL, INSPECT SUBGRADE AND VERIFY THAT SITE HAS BEEN PREPARED PROPERLY	1705.6		X	

TABLE 2 – REQUIRED SPECIAL INSPECTIONS AND TESTS OF CONCRETE CONSTRUCTION (IBC, TABLE 1705.3)

TYPE	IBC REFERENCE	INSPECTION FREQUENCY		REFERENCE STANDARD
		CONTINUOUS	PERIODIC	
INSPECTION OF REINFORCING STEEL AND VERIFY PLACEMENT	1705.3		X	ACI 318: SECTION 20, 25.2, 25.3, 26.6.1–26.6.3
INSPECT ANCHORS CAST IN CONCRETE	1705.3		X	ACI 318: SECTION 26.7
VERIFYING USE OF REQUIRED DESIGN MIX	1705.3		X	ACI 318: CHAPTER 19, SECTIONS 26.4.3, 26.4.4
PRIOR TO CONCRETE PLACEMENT FABRICATE SPECIMENS FOR STRENGTH TESTS, PERFORM SLUMP AND AIR CONTENT TESTS, AND DETERMINE THE TEMPERATURE OF THE CONCRETE	1705.3	X		ACI 318: SECTIONS 26.5, 26.12 ASTM C172 ASTM C31
INSPECT CONCRETE PLACEMENT FOR PROPER APPLICATION TECHNIQUES	1705.3	X		ACI 318: SECTIONS 26.5
VERIFY MAINTENANCE OF SPECIFIED CURING TEMPERATURE AND TECHNIQUES	1705.3		X	ACI 318: SECTIONS 26.5.3–26.5.5
INSPECT FORMWORK FOR SHAPE, LOCATION AND DIMENSIONS OF THE CONCRETE MEMBER BEING FORMED	1705.3		X	ACI 318: SECTION 26.11.1.2(b)
INSPECT ANCHORS POST–INSTALLED IN HARDENED CONCRETE MEMBERS:	1705.3			
a: ADHESIVE ANCHORS INSTALLED IN HORIZONTALLY OR UPWARDLY INCLINED ORIENTATIONS TO RESIST SUSTAINED TENSION LOADS.		X		ACI 318, SECTION 26.13.3.2
b: MECHANICAL ANCHORS AND ADHESIVE ANCHORS NOT DEFINED IN a.			X	ACI 318, SECTION 26.13.3

pw:\\cdmsmith-azo2-pw.bentley.com:PW_PL1\261865\269061\04 Design Services NM_Conformed\04 Structural\10 CADD\S002GNSI.dwg
© 2026 CDM SMITH ALL RIGHTS RESERVED.
REUSE OF DOCUMENTS: THESE DOCUMENTS AND DESIGNS PROVIDED BY PROFESSIONAL SERVICE, INCORPORATED HEREIN, ARE THE PROPERTY OF CDM SMITH AND ARE NOT TO BE USED, IN WHOLE OR PART, FOR ANY OTHER PROJECT WITHOUT THE WRITTEN AUTHORIZATION OF CDM SMITH.

REV. NO.	DATE	DRWN	CHKD	REMARKS

DESIGNED BY: G. TERANDO
DRAWN BY: J. McCORMACK
SHEET CHK'D BY: G. TERANDO
CROSS CHK'D BY: K. WAGNER
APPROVED BY: K. GALLERIE
DATE: APRIL 2026

CDM Smith
101 East River Drive, Suite 1A
East Hartford, CT 06108
Tel: (860) 529-7615

BROOKFIELD, CONNECTICUT

DEAN AND POCONO ROADS
GRAVITY SANITARY SEWER EXTENSION

SCHEDULE OF SPECIAL INSPECTIONS AND TESTS

PROJECT NO. 261865–269061
FILE NAME: S002GNSI.DWG

SHEET NO.
S-2

STATE OF CONNECTICUT
KEVIN D. GALLERIE
70301
LICENSED PROFESSIONAL ENGINEER

Digitally signed by Kevin Gallerie
Date: 2026.04.28 14:23:22-04'00'

SCOPE OF WORK:

1. PROJECT PROVIDES INSTALLATION OF A NEW PUMPING STATION IN THE TOWN OF BROOKFIELD, CONNECTICUT. MAJOR IMPROVEMENTS INCLUDE, BUT ARE NOT LIMITED TO PROVIDING NEW MAIN ELECTRICAL SERVICE AND CONNECTION OF NEW GENERATOR TO NEW ELECTRICAL CABINET; POWER DISTRIBUTION TO MOTORS AND INSTRUMENTS.

GENERAL NOTES:

1. ELECTRICAL DRAWINGS ARE INTENDED TO SHOW THE GENERAL LAYOUT OF WORK TO BE INSTALLED UNDER THIS CONTRACT WITHOUT ATTEMPTING TO SHOW ALL DETAILS. FURNISH LABOR, MATERIALS, EQUIPMENT AND INCIDENTALS REQUIRED FOR A COMPLETE AND OPERATIONAL ELECTRICAL SYSTEM AS SHOWN ON THE CONTRACT DOCUMENTS.
2. COORDINATE WORK WITH OTHER TRADES AND THE OWNER.
3. FIELD VERIFY EXISTING UNDERGROUND ELECTRICAL CONDUIT, CONCRETE DUCT BANKS, MANHOLES, PULL BOXES, ETC. AND MECHANICAL PIPING. CONTRACTOR SHALL INCLUDE IN BID COSTS ASSOCIATED WITH RELOCATION OR REMOVAL OF UNDERGROUND EQUIPMENT AS REQUIRED BY THIS CONTRACT. USE DUE CARE IN CONGESTED AREAS TO AVOID DAMAGE TO EXISTING UNDERGROUND UTILITIES.
4. CONTRACTOR'S WORK SHALL INCLUDE COMPLETE TESTING OF EQUIPMENT AND WIRING INCLUDING MAKING MINOR CORRECTIONS, CHANGES, OR ADJUSTMENTS NECESSARY FOR THE PROPER FUNCTIONING OF THE SYSTEM AND EQUIPMENT. WORKMANSHIP SHALL BE OF THE HIGHEST QUALITY; SUBSTANDARD WORK WILL BE REJECTED.
5. DO NOT SCALE ELECTRICAL DRAWINGS. REFER TO MECHANICAL, STRUCTURAL DRAWINGS, AND APPROVED MANUFACTURER'S SHOP DRAWINGS FOR EXACT LOCATION OF EQUIPMENT. EXCEPT WHERE DIMENSIONS ARE SHOWN, LOCATIONS OF EQUIPMENT, FIXTURES, OUTLETS, AND SIMILAR DEVICES ARE APPROXIMATE.
6. WORK SHALL COMPLY WITH NATIONAL ELECTRICAL CODE AND LOCAL CODES.
7. DO NOT SPLICE CONDUCTORS EXCEPT AS NOTED.
8. POWER AND CONTROL CONDUITS SHALL HAVE AN EQUIPMENT GROUNDING CONDUCTOR WIRE SIZED PER TABLE 250.122 OF THE NATIONAL ELECTRICAL CODE UNLESS OTHERWISE NOTED.
9. COORDINATE SEQUENCE OF CONSTRUCTION WITH CIVIL, MECHANICAL, AND STRUCTURAL DISCIPLINES. PROVIDE TEMPORARY POWER AND CONTROL CIRCUITS AS REQUIRED TO MAINTAIN FACILITY OPERATION. VERIFY EXISTING UTILITIES IN AREA OF CONSTRUCTION. REFER TO CIVIL DRAWINGS FOR ADDITIONAL UNDERGROUND INFORMATION.
10. REPAIR, IN ACCORDANCE WITH SPECIFICATIONS, SIDEWALKS, WALLS, ROADWAYS, ETC. DISTURBED BY CONSTRUCTION ACTIVITIES WHETHER OR NOT SHOWN FOR REPAIR/REPAVING ON CIVIL DRAWINGS.
11. WHERE LOCAL DISCONNECTS AND CONTROL PANELS ARE SHOWN ON PLAN VIEWS, LOCATIONS ARE APPROXIMATE. ADJUST LOCATION AS REQUIRED TO COMPLY WITH NATIONAL ELECTRIC CODE ARTICLE 110 FOR WORKING CLEARANCES.

SUBMITTALS:

1. SUBMIT RECORD DOCUMENTATION TO ACCURATELY SHOW COMPLETED INSTALLATION. INCLUDE MODIFICATIONS TO CONTRACT DOCUMENTS (ONE LINE POWER DIAGRAMS, EQUIPMENT ELEVATIONS, PANEL SCHEDULES, ELEMENTARY CONTROL DIAGRAMS, RISER DIAGRAMS, PLANS, CONDUIT AND DUCTBANK ROUTING, ETC) ALONG WITH ADDITIONAL DRAWINGS OR SKETCHES CREATED TO CONVEY COMPLETED INSTALLATION.

INTERPRETATION OF CONTRACT DOCUMENTS:

1. IN GENERAL, DRAWINGS DO NOT SHOW CONDUIT ROUTING. PLAN AND ROUTE CONDUITS IN COMPLIANCE WITH SPECIFICATIONS AND DRAWING DETAILS. COORDINATE INSTALLATION WITH OTHER TRADES AND ACTUAL SUPPLIED EQUIPMENT.
2. DUCTBANK ROUTING SHOWN ON ELECTRICAL SITE PLANS IS DIAGRAMMATIC IN NATURE AND MAY NOT INCLUDE INTERFERENCES THAT MAY BE PRESENT.

ENCLOSURE TYPES:

PROVIDE THE FOLLOWING NEMA TYPE ELECTRICAL ENCLOSURES, UNLESS OTHERWISE NOTED:

1. NEMA 1 IN DRY, NON-PROCESS INDOOR LOCATIONS.
2. NEMA 4X IN OUTDOOR LOCATIONS, ROOMS BELOW GRADE INCLUDING BASEMENTS AND BURIED VAULTS AND "DAMP" OR "WET" LOCATIONS SHOWN ON THE DRAWINGS.
3. NEMA 7 AND LISTED FOR THE SPECIFIC NEC HAZARDOUS AREA CLASSIFICATION AS SHOWN ON THE DRAWINGS.

NEC CLASSIFIED HAZARDOUS AREAS:

1. THIS PROJECT INCLUDES NEC CLASSIFIED HAZARDOUS AREAS. THE FOLLOWING NATIONAL FIRE PROTECTION ASSOCIATION (NFPA) STANDARDS APPLY:

- NFPA 820 (2024) – STANDARD FOR FIRE PROTECTION IN WASTEWATER TREATMENT AND COLLECTION FACILITIES

2. EQUIPMENT, MATERIALS, AND INSTALLATION SHALL COMPLY WITH NEC ARTICLES 500, 501, 502, AND 503.

MATERIALS AND EQUIPMENT:

1. PROVIDE NEW MATERIALS AND EQUIPMENT UNLESS SPECIFICALLY NOTED OTHERWISE.
2. ELECTRICAL EQUIPMENT AND MATERIALS SHALL BE LISTED BY UNDERWRITER'S LABORATORIES, INC., AND SHALL BEAR APPROPRIATE UL LISTING MARK OR CLASSIFICATION MARKING. EQUIPMENT, MATERIALS, ETC. UTILIZED NOT BEARING A UL CERTIFICATION SHALL BE FIELD OR FACTORY UL CERTIFIED PRIOR TO EQUIPMENT ACCEPTANCE AND USE.
3. PROVIDE MAJOR ELECTRICAL EQUIPMENT BY A SINGLE MANUFACTURER: I.E. UNIT SUBSTATIONS, SWITCHGEAR, MOTOR CONTROL CENTERS, DISCONNECT SWITCHES, TRANSFORMERS, PANELBOARDS, ETC.

EQUIPMENT SIZE, HANDLING AND STORAGE:

1. COORDINATE WITH EQUIPMENT MANUFACTURER SHIPPING SPLITS TO PERMIT SAFE HANDLING AND PASSAGE OF EQUIPMENT TO FINAL INSTALLATION LOCATION.
2. COMPLY WITH MANUFACTURER'S INSTRUCTIONS FOR UPRIGHT EQUIPMENT ORIENTATION DURING TRANSPORTATION.
3. PROTECT EQUIPMENT FROM MECHANICAL INJURY, OR EXPOSURE TO MOISTURE, CHEMICALS, OR CORROSIVE GASES. DO NOT STORE ELECTRICAL EQUIPMENT OUTDOORS.
4. PROVIDE AND ENERGIZE TEMPORARY SPACE HEATERS IF REQUIRED TO CONTROL MOISTURE DURING STORAGE.

SERVICE AND METERING:

1. ELECTRIC POWER COMPANY SERVING THIS PROJECT IS EVERSOURCE. POWER COMPANY CONTACT IS ROBERT CATALDI, TELEPHONE 860-605-8151, EMAIL ROBERT.CATALDI@EVERSOURCE.COM, WORK REQUEST NUMBER 23230990. COMPLY WITH POWER COMPANY STANDARDS.
2. PAY FOR FEES AND CHARGES AS REQUIRED FOR TEMPORARY/CONSTRUCTION POWER FOR CONTRACTOR'S USE.
3. PAY FEES AND CHARGES FOR PERMANENT SERVICE VIA BID ALLOWANCE AND SUBMIT POWER COMPANY INVOICES TO OWNER FOR SUBSTANTIATION.
4. POWER COMPANY WORK:
   - PROVIDE PRIMARY CONDUCTORS TO UTILITY TRANSFORMER.
   - PROVIDE UTILITY TRANSFORMER.
   - TERMINATE PRIMARY CABLES AT THE UTILITY TRANSFORMER(S).
   - TERMINATE SECONDARY CABLES AT THE UTILITY TRANSFORMER(S).
   - PROVIDE METER.
5. CONTRACTOR WORK:
   - ARRANGEMENTS WITH POWER COMPANY TO OBTAIN SERVICE, PAY POWER COMPANY FEES, AND PROVIDE LABOR AND MATERIALS REQUIRED FOR ELECTRICAL SERVICE.
   - PROVIDE SECONDARY UNDERGROUND CONDUITS AND CABLE FROM UTILITY TRANSFORMER TO SERVICE ENTRANCE EQUIPMENT.
   - INSTALL METER BASE ENCLOSURE.

CLEANING:

1. REMOVE ALL RUBBISH AND DEBRIS FROM INSIDE AND AROUND ELECTRICAL EQUIPMENT AND ENCLOSURES.
2. REMOVE DIRT, DUST OR CONCRETE SPATTER FROM INTERIOR AND EXTERIOR OF EQUIPMENT USING BRUSHES, VACUUM CLEANER OR CLEAN LINT-FREE RAGS. DO NOT USE COMPRESSED AIR.

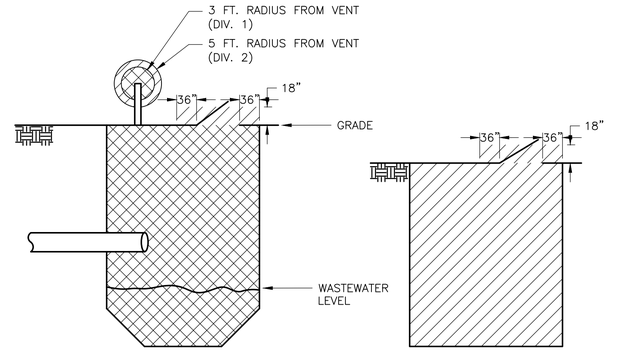

BELOW GRADE WET WELL
(NFPA 820 (2024) TABLE 4.2.2 ROW 14B)

BELOW GRADE VALVE VAULT
(NFPA 820 (2024) TABLE 4.2.2 ROW 29a)

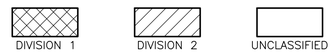

ELECTRICAL AREA CLASSIFICATION

DETAIL A
N.T.S.

© 2026 CDM SMITH ALL RIGHTS RESERVED.
REUSE OF DOCUMENTS: THESE DOCUMENTS AND DESIGNS PROVIDED BY PROFESSIONAL SERVICE, INCORPORATED HEREIN, ARE THE PROPERTY OF CDM SMITH AND ARE NOT TO BE USED, IN WHOLE OR PART, FOR ANY OTHER PROJECT WITHOUT THE WRITTEN AUTHORIZATION OF CDM SMITH.

REV. NO.	DATE	DRWN	CHKD	REMARKS

DESIGNED BY: J. BRISCOE REED
DRAWN BY: J. BRISCOE REED
SHEET CHK'D BY: CHARIS-MOLLING
CROSS CHK'D BY: K. WAGNER
APPROVED BY: CHARIS-MOLLING
DATE: APRIL 2026

CDM Smith
101 East River Drive, Suite 1A
East Hartford, CT 06108
Tel: (860) 529-7615

BROOKFIELD, CONNECTICUT

DEAN AND POCONO ROADS
GRAVITY SANITARY SEWER EXTENSION

ELECTRICAL GENERAL NOTES

STATE OF CONNECTICUT · BETHANY CHARIS-MOLLING · 35265 · LICENSED PROFESSIONAL ENGINEER

Bethany Charis-Molling
2026.04.28 15:26:15-04'00'

PROJECT NO. 261865-269061
FILE NAME: E001NFNT

SHEET NO.
E-1

ONE LINE OR CONTROL DIAGRAM	PLAN	DESCRIPTION
FRAME / TRIP	CB	LOW VOLTAGE AIR OR MOLDED CASE CIRCUIT BREAKER, 3 POLE UNLESS OTHERWISE NOTED.
SIZE # / AMPS / TYPE *	⊠	COMBINATION MOTOR CIRCUIT PROTECTOR AND MAGNETIC MOTOR STARTER, FULL VOLTAGE NON-REVERSING UNLESS OTHERWISE NOTED: ✱ FVR – FULL VOLTAGE REVERSING RVNR – REDUCED VOLTAGE NON-REVERSING RVAT – REDUCED VOLTAGE AUTOTRANSFORMER RVSS – REDUCED VOLTAGE SOLID STATE 2S1W – TWO SPEED, ONE WINDING 2S2W – TWO SPEED, TWO WINDING (DIAGRAMMATICALLY SHOWN, CONTRACTOR SHALL FIELD LOCATE)
	G	GENERATOR, RATINGS AND CONNECTIONS AS NOTED
ATS, N, S, 100A	—	AUTOMATIC OR MANUAL TRANSFER SWITCH NO.1 (ATS-1), (MTS-1) "N" INDICATES NORMAL OR PREFERRED SOURCE "S" INDICATES STANDBY OR ALTERNATE SOURCE 100A INDICATES CONTINUOUS CURRENT RATING
✱	✱	VARIABLE SPEED DRIVE CONTROLLER ✱ D.C. = D.C. DRIVE CONTROLLER SCR = SILICON CONTROLLED RECTIFIER VFD = VARIABLE FREQUENCY DRIVE
(S)	(M)	MOTOR, NUMERAL INDICATES HORSEPOWER
✱	—	METER WM – WATTMETER WHM – WATTHOUR METER WHDM – WATTHOUR DEMAND METER WHDR – WATTHOUR DEMAND RECORDER PF – POWER FACTOR METER DMU – DIGITAL METERING UNIT TRANSDUCER AX – CURRENT TRANSDUCER WX – WATT TRANSDUCER WHX – WATTHOUR TRANSDUCER
	⊙	GROUND OR GROUND ROD
	—	INDICATES LIMITS OF ELECTRICAL EQUIPMENT OR WIRING ENCLOSURE

SYMBOL	DESCRIPTION
	CONDUIT CONCEALED IN OR BELOW FLOOR OR UNDERGROUND.
(2) 3"C., 3#3/0, 1#2G	DENOTES A QUANTITY OF TWO (2) 3-INCH CONDUITS EACH CONTAINING THREE NO. 3/0 AWG CONDUCTORS AND 1 NO. 2 AWG GROUND CONDUCTOR.
2-2/C#16 SH	DENOTES A QUANTITY OF TWO INSTRUMENT CABLES, EACH CABLE TO CONSIST OF TWO NO. 16 AWG CONDUCTORS TWISTED TOGETHER AND COVERED WITH A METALLIC SHIELD AND AN OVERALL PROTECTIVE JACKET. REFER TO THE SPECIFICATIONS FOR THE EXACT CABLE TO BE PROVIDED.
(3) 4"C.	THREE 4-INCH CONDUITS
	FLEXIBLE METAL CONDUIT "WHIP" (3/4"C., 2#12, 1#12G UNLESS OTHERWISE NOTED) FOR LIQUID TIGHT MOTOR CONNECTIONS
	'X' INDICATES CONDUIT SEAL FITTING IN OTHER THAN CODE REQUIRED LOCATIONS.
⊠	INDICATES MOTOR STARTER AND/OR MOTOR CONTROL EQUIPMENT WITHIN THE ENCLOSURE.

ABBREVIATIONS	
A	AMPS
AC	ALTERNATING CURRENT
AFF	ABOVE FINISHED FLOOR
AFG	ABOVE FINISHED GRADE
AL	ALUMINUM
AIC	AMPERE INTERRUPTING CAPACITY
AMP	AMPERE
ATS	AUTOMATIC TRANSFER SWITCH
AUTO	AUTOMATIC
AUX	AUXILIARY
AWG	AMERICAN WIRE GAUGE
BKR	BREAKER
BLDG	BUILDING
C	CONDUIT
CB	CIRCUIT BREAKER
CGD	COMBUSTIBLE GAS DETECTOR
CKT	CIRCUIT
CLB	CURRENT LIMITING BREAKER
CLF	CURRENT LIMITING FUSE
CP	CONTROL PANEL
CPT	CONTROL POWER TRANSFORMER
CR	CONTROL RELAY
CS	CONTROL SWITCH/CONTROL STATION
CT	CURRENT TRANSFORMER
CU	COPPER
CWS	CONDUIT WALL SEAL
DC	DIRECT CURRENT
DIA	DIAMETER
DMU	DIGITAL METERING UNIT
DN	DOWN
EC	EMPTY CONDUIT
ELEC	ELECTRICAL

ABBREVIATIONS (CONTINUED)	
ELEV	ELEVATION
EM	EMERGENCY
ENCL	ENCLOSURE OR ENCLOSED
EQUIP	EQUIPMENT
EWC	ELECTRIC WATER COOLER
EWH	ELECTRIC WATER HEATER
EX	EXISTING
FO	FIBER OPTIC
FU	FUSE
GCP	GENERATOR CONTROL PANEL
GEN	GENERATOR
G, GND	GROUND
GFI	GROUND FAULT INTERRUPTER
GRS	GALVANIZED RIGID STEEL
HACR	HEATING & AIR CONDITIONING RATED
HH	HANDHOLE
HT	HEIGHT
HID	HIGH INTENSITY DISCHARGE
HP	HORSEPOWER
HZ	HERTZ
ID	IDENTIFICATION
INSTR	INSTRUMENT
K	KILO (PREFIX)
kcmil	1000 CIRCULAR MILS
KVA	KILOVOLT AMPERES
KW	KILOWATTS
LA	LIGHTNING ARRESTER
LTG	LIGHTING
LP	LIGHTING PANEL
LV	LOW VOLTAGE
MAX	MAXIMUM
MCB	MAIN CIRCUIT BREAKER
MCC	MOTOR CONTROL CENTER
MCP	MOTOR CIRCUIT PROTECTOR
MDP	MAIN DISTRIBUTION PANEL
MFR	MANUFACTURER
MH	MANHOLE
MIN	MINIMUM
MLO	MAIN LUGS ONLY
MTD	MOUNTED
MTS	MANUAL TRANSFER SWITCH
MV	MEDIUM VOLTAGE
N	NEUTRAL
NC	NORMALLY CLOSED
NO	NORMALLY OPEN OR NUMBER
NTS	NOT TO SCALE
OH	OVERHEAD
OL	OVERLOAD
PB	PULL BOX
PCP	PUMP CONTROL PANEL
PH	PHASE
PMH	POWER MANHOLE
PNL	PANEL OR PANELBOARD
PR	PAIR
PRI	PRIMARY
PT	POTENTIAL TRANSFORMER
PVC	POLYVINYL CHLORIDE
RECPT	RECEPTACLE
REQD	REQUIRED
QTY	QUANTITY
SA	SURGE ARRESTER
SEC	SECONDS OR SECONDARY
SH	SHIELDED OR SPACE HEATER
SHH	SIGNAL HANDHOLE
SPD	SURGE PROTECTIVE DEVICE
SS	STAINLESS STEEL
SV	SOLENOID VALVE
SW	SWITCH
SWBD	SWITCHBOARD
SWGR	SWITCHGEAR
TC	TIME TO CLOSE OR TRAY CABLE
TEL	TELEPHONE
TO	TIME TO OPEN
TS	TWISTED SHIELDED OR THERMAL SWITCH
TYP	TYPICAL
UG	UNDERGROUND
UPS	UNINTERRUPTIBLE POWER SUPPLY
V	VOLTS
VA	VOLT AMPS
VFD	VARIABLE FREQUENCY DRIVE
W	WATTS, WIDTH, WITH, WIRE
WP	WEATHERPROOF
XP	EXPLOSION PROOF
XFMR	TRANSFORMER

NOTES:

1. IN GENERAL CONDUIT ROUTING FOR EQUIPMENT AND DEVICES IS NOT SHOWN ON THE PLANS. THE CONTRACTOR SHALL BE RESPONSIBLE FOR ROUTING ALL CONDUITS WHICH SHALL INCLUDE CONDUITS SHOWN ON ONE-LINE AND RISER DIAGRAMS AND HOME-RUNS SHOWN ON PLAN DRAWINGS. REFER TO SPECIFICATIONS FOR MATERIALS AND INSTALLATION REQUIREMENTS.

2. THE WIRING DIAGRAMS, QUANTITY AND SIZE OF WIRES AND CONDUITS REPRESENT A SUGGESTED ARRANGEMENT BASED UPON SELECTED STANDARD COMPONENTS OF ELECTRICAL EQUIPMENT. MODIFICATIONS ACCEPTABLE TO THE ENGINEER MAY BE MADE BY THE CONTRACTOR TO ACCOMMODATE EQUIPMENT ACTUALLY PURCHASED. THE BASIC SEQUENCE AND METHOD OF CONTROL MUST BE MAINTAINED AS INDICATED ON THE DRAWINGS AND/OR SPECIFICATIONS.

3. SWITCHGEAR AND MOTOR CONTROL CENTER COMPARTMENT DESIGNATIONS AS INDICATED BELOW:
   - BLANK: NOT INTENDED FOR USE. PLATE ONLY
   - SPACE: EQUIPPED WITH REQUIRED BUS AND HARDWARE FOR THE FUTURE ADDITION OF BREAKERS AND/OR STARTERS WITHIN THE SIZE AND RANGE SHOWN
   - SPARE: CONTAINS A COMPLETELY INSTALLED BREAKER AND/OR STARTER OF SIZE AND TYPE INDICATED FOR FUTURE USE.

4. INTERPRETATION OF ELECTRICAL DRAWINGS: CIRCUIT IDENTIFICATION, ROUTING, AND SIZES OF CONDUITS AND WIRES ARE SHOWN ON THE FOLLOWING DRAWINGS:

A. ONE LINE POWER DIAGRAMS: POWER, CONTROL AND SIGNAL WIRING REQUIREMENTS FOR ELECTRICAL DISTRIBUTION EQUIPMENT AND UTILIZATION EQUIPMENT POWERED FROM SWITCHGEAR, SWITCHBOARDS, MOTOR CONTROL CENTERS AND MAJOR POWER DISTRIBUTION PANELBOARDS ARE TYPICALLY SHOWN ON THE ONE LINE DIAGRAMS. THE PARAMETERS IDENTIFIED ON THE ONE LINE DIAGRAMS ARE: CIRCUIT IDENTIFICATION, CIRCUIT ORIGIN AND DESTINATION, CONDUIT SIZE, WIRE SIZE AND QUANTITY FOR COMPLETE CIRCUIT LENGTH, AND AUXILIARY DEVICES ASSOCIATED WITH THE CONTROL/PROTECTION OF THE POWERED EQUIPMENT, AND SIZE OF THE GROUNDING ELECTRODE CONDUCTORS.

B. INSTRUMENTATION AND CONTROL RISER DIAGRAMS: POWER, CONTROL, SIGNAL AND DATA HIGHWAY WIRING REQUIREMENTS FOR INSTRUMENTS AND CONTROL DEVICES CONTROLLED/MONITORED FROM INSTRUMENTATION AND CONTROL PANELS SUCH AS RTUS, PLCS, TERMINAL CABINETS, AND REMOTE I/O PANELS ARE TYPICALLY SHOWN ON THE INSTRUMENTATION AND CONTROL ONE LINE DIAGRAMS. THE PARAMETERS IDENTIFIED ON THE ONE LINE DIAGRAMS ARE: CIRCUIT IDENTIFICATION, CIRCUIT ORIGIN AND DESTINATION, CONDUIT SIZE, WIRE SIZE, QUANTITY AND TYPE FOR COMPLETE CIRCUIT LENGTH, AND AUXILIARY DEVICES ASSOCIATED WITH THE CONTROL/PROTECTION OF THE POWERED EQUIPMENT.

C. FLOOR PLANS: FOR DETERMINING THE LENGTH OF CIRCUITS LOCATED WITHIN STRUCTURES, FLOOR PLANS SHOW THE LOCATION OF ELECTRICAL DISTRIBUTION EQUIPMENT, CONTROL PANELS, UTILIZATION EQUIPMENT, INSTRUMENTS, ANCILLARY EQUIPMENT AND DEVICES AND THE ANTICIPATED PENETRATION LOCATIONS WHERE CONDUITS EXIT/ENTER THE STRUCTURE. HOMERUNS MAY ALSO BE SHOWN FROM MISCELLANEOUS EQUIPMENT NOT SHOWN ON A ONE LINE OR RISER DIAGRAM.

D. SITE PLANS: FOR DETERMINING THE LENGTH OF CIRCUITS EXTERIOR TO STRUCTURES AND TO IDENTIFY THE SPECIFIC REQUIREMENTS OF THE UNDERGROUND CONDUITS OR DUCT BANKS, SITE PLANS SHOW THE GENERAL ROUTING OF UNDERGROUND CONDUITS AND DUCT BANKS WITH SECTIONS INDICATING THE CONDUIT SIZE, ARRANGEMENT AND CIRCUIT ROUTING.

E. NOTE THAT CONDUIT SIZE WITHIN THE STRUCTURE IS INDICATED ON ONE-LINE DIAGRAM AND UNDERGROUND SIZE IS INDICATED ON DUCT BANK SECTIONS.

GENERAL NOTE
THIS IS A STANDARD LEGEND. SOME SYMBOLS MAY NOT APPEAR ON THE DRAWINGS.



EXISTING, NEW OR FUTURE CONDITION DESIGNATION

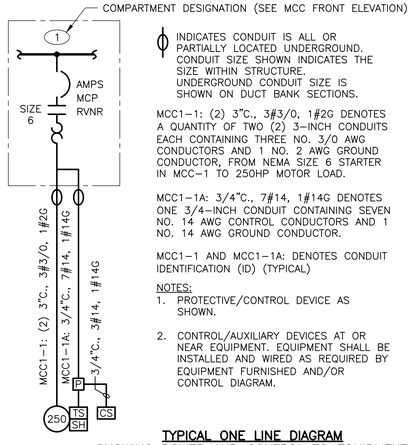

INDICATES CONDUIT IS ALL OR PARTIALLY LOCATED UNDERGROUND. CONDUIT SIZE SHOWN INDICATES THE SIZE WITHIN STRUCTURE. UNDERGROUND CONDUIT SIZE IS SHOWN ON DUCT BANK SECTIONS.

MCC1-1: (2) 3"C., 3#3/0, 1#2G DENOTES A QUANTITY OF TWO (2) 3-INCH CONDUITS EACH CONTAINING THREE NO. 3/0 AWG CONDUCTORS AND 1 NO. 2 AWG GROUND CONDUCTOR, FROM NEMA SIZE 6 STARTER IN MCC-1 TO 250HP MOTOR LOAD.

MCC1-1A: 3/4"C., 7#14, 1#14G DENOTES ONE 3/4-INCH CONDUIT CONTAINING SEVEN NO. 14 AWG CONTROL CONDUCTORS AND 1 NO. 14 AWG GROUND CONDUCTOR.

MCC1-1 AND MCC1-1A: DENOTES CONDUIT IDENTIFICATION (ID) (TYPICAL)

NOTES:
1. PROTECTIVE/CONTROL DEVICE AS SHOWN.
2. CONTROL/AUXILIARY DEVICES AT OR NEAR EQUIPMENT. EQUIPMENT SHALL BE INSTALLED AND WIRED AS REQUIRED BY EQUIPMENT FURNISHED AND/OR CONTROL DIAGRAM.

TYPICAL ONE LINE DIAGRAM SHOWING POWER AND CONTROL TO EQUIPMENT



SYMBOL WHERE THERE IS A DETAIL

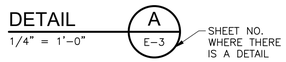

SYMBOL WHERE DETAIL IS DRAWN

DETAIL SYMBOL



SYMBOL WHERE THERE IS A SECTION



SYMBOL WHERE SECTION IS DRAWN

SECTION SYMBOL

© 2026 CDM SMITH ALL RIGHTS RESERVED.
REUSE OF DOCUMENTS: THESE DOCUMENTS AND DESIGNS PROVIDED BY PROFESSIONAL SERVICE, INCORPORATED HEREIN, ARE THE PROPERTY OF CDM SMITH AND ARE NOT TO BE USED, IN WHOLE OR PART, FOR ANY OTHER PROJECT WITHOUT THE WRITTEN AUTHORIZATION OF CDM SMITH.

REV. NO.	DATE	DRWN	CHKD	REMARKS

DESIGNED BY: J. BRISCOE REED
DRAWN BY: J. BRISCOE REED
SHEET CHK'D BY: CHARIS-MOLLING
CROSS CHK'D BY: K. WAGNER
APPROVED BY: CHARIS-MOLLING
DATE: APRIL 2026

CDM Smith
101 East River Drive, Suite 1A
East Hartford, CT 06108
Tel: (860) 529-7615

BROOKFIELD, CONNECTICUT

DEAN AND POCONO ROADS
GRAVITY SANITARY SEWER EXTENSION

ELECTRICAL LEGEND

STATE OF CONNECTICUT · CHARTERED 1784 · 35293 · LICENSED PROFESSIONAL ENGINEER

Bethany Charis-Molling
2026.04.28 15:26:25-04'00'

PROJECT NO. 261865-269061
FILE NAME: E002NFLG

SHEET NO.
E-2

EQUIPMENT LIST

ITEM NO.		DESCRIPTION	MANUFACTURER
1		METER SOCKET 208/120V 3 PHASE, 4 WIRE PER EVERSOURCE STANDARDS	MILBANK, SQUARE D, OR EQUAL
2		SERVICE ENTRANCE RATED MAIN CIRCUIT BREAKER	EATON, SQUARE D, OR EQUAL
3		NEMA 3R 316SS TYPE ENCLOSURE WITH GASKETED OVERLAPPING DOORS WITHOUT CENTER POST, STEEL 3 POINT LATCHING MECHANISM AND KEY–LOCKING HARDWARE. CONTRACTOR IS RESPONSIBLE FOR COORDINATING EXACT DIMENSIONS OF CABINET WITH EQUIPMENT FURNISHED IN THE FIELD WITH APPROVAL BY OWNER.	APX, BISON PROFAB, OR EQUAL
4		SURGE PROTECTIVE DEVICE (SPD)	EATON, SQUARE D, OR EQUAL
5		AUTOMATIC TRANSFER SWITCH, 200 AMP, 208/120 VOLT, 3ϕ, 4 WIRE, SWITCHED NEUTRAL, NEMA 12 ENCLOSURE WITH EQUIPMENT GROUND BUS DOUBLE LUGS AND LOSS OF POWER CONTACTS. PROVIDE INDICATING VOLTMETER TO INDICATE POWER OUTAGE.	ASCO, CUMMINS, KOHLER, OR EQUAL
6		PUMP CONTROL PANEL FURNISHED UNDER DIVISION 33, INSTALLED UNDER DIVISION 26.	BY DIVISION 33
7		15 HP VFD (BY DIVISION 33)	SEE DIVISION 33 SPECIFICATIONS
8	A	OUTLET BOX AND COVER WITH GFCI DUPLEX RECEPTACLE	CROUSE–HINDS, HUBBELL, OR EQUAL
	B	SINGLE POLE SWITCH, 20 A, 120 V, GROUNDING TYPE BROWN WITH SINGLE GANG OUTLET BOX AND COVER	CROUSE–HINDS, HUBBELL, OR EQUAL
	C	LED LIGHT FIXTURE, 17 WATT WITH GLOBE CATALOG NUMBER VA–W–17LED–CW–FGC	PHOENIX, CROUSE–HINDS, OR EQUAL
	D	100 WATTS, 120 VOLT STRIP HEATER (FRONT AND BACK) WITH THERMOSTAT TO VOID CONDENSATION	CHROMALOX OR EQUAL
9		GROUND BUS WITH SET–SCREW TERMINALS (SEE CONNECTIONS INDICATED ON ONE LINE DIAGRAM.)	EATON, SQUARE D, OR EQUAL
10		THREE GROUND RODS 10–'0" LONG X 3/4" DIAMETER. TOP OF RODS 18" BELOW FINISHED GRADE SPACED 10 FEET APART. SEE ELECTRICAL DETAILS.	EAST COAST LIGHTING EQUIPMENT (ECLE), ERICO, OR EQUAL
11		208/120 VOLT, 250 AMP BUS, 3–PHASE, 4–WIRE, 22 KAIC PANELBOARD	EATON, SQUARE D, OR EQUAL
12		MAGNETIC DOOR CONTACTS FOR CONNECTION TO INTRUSION ALARM SYSTEM. EACH DOOR TO BE WIRED SEPARATELY (FRONT AND BACK)	ARITECH, HONEYWELL, OR EQUAL
13		KEY SWITCH FOR DOOR CONTACTS MOUNTED ON A SINGLE GANG BOX (FRONT AND BACK)	CUTLER–HAMMER, SECURITRON, OR EQUAL
14		SERVICE ENTRANCE RATED GENERATOR CIRCUIT BREAKER (LOCATED IN PEDESTAL CABINET)	EATON, SQUARE D, OR EQUAL
15		2' X 2' PROVISION FOR FUTURE PLC PANEL	BY DIVISION 33
16		INTRINSICALLY SAFE PANEL IN PEDESTAL CABINET	BY DIVISION 33

WIRING SCHEDULE

CONDUIT TAG	CONDUIT SIZE	WIRE QTY.	WIRE SIZE	REMARKS (NOTE 1)
A1	2"	1	VENDOR CABLE	ANALOG SIGNAL FROM WETWELL TO JUNCTION BOX (DIV. 33)
A2	2"	2	2/C#16 T.S	ANALOG SIGNAL FROM JUNCTION BOX (DIV. 33) TO INTRINSICALLY SAFE PANEL (DIV. 33) IN PEDESTAL CABINET
C1	3/4"	10 1	#14 #14(G)	GENERATOR SIGNALS TO ATS
D1	2"	3	VENDOR CABLE	DIGITAL SIGNALS FROM WETWELL TO JUNCTION BOX (DIV. 33)
D2	2"	10 1	#14 #14(G)	DIGITAL SIGNALS FROM JUNCTION BOX (DIV. 33) TO INTRINSICALLY SAFE PANEL (DIV. 33) IN PEDESTAL CABINET
P1	3"	4 1	#3/0 #3/0(GSC)	MAIN FEEDER (SERVICE FEEDER)
P2	2–1/2"	3, 1 10, 1	#3/0, #3/0(N) #14, #6(G)	GENERATOR POWER AND SIGNALS TO ATS
P2A	2"	3, 1	#3/0, #3/0(N) #6(G)	GENERATOR TO GENERATOR CIRCUIT BREAKER POWER FEEDER AND ATS
P3	2"	3, 1	#3/0, #3/0(N) #6(G)	ATS NORMAL POWER FEEDER
P4	3/4"	3, 1	#10, #10(N) #10(G)	BRANCH CIRCUIT WIRING
P5	2"	3, 1	#3/0, #3/0(N) #6(G)	ATS TO PANELBOARD
P6	3/4"	1	#4GEC	GROUNDING ELECTRODE CONDUCTOR
P7	3/4"	2 1	#12 #12(G)	120 VOLT BRANCH CIRCUIT WIRING
P8	1–1/2"	3, 1	#3, #3(N) #8(G)	FEED TO PUMP CONTROL PANEL
P9	2"	3, 1	#10, #10(N) #10G	TO STANDBY GENERATOR LOADS
S2	2"	–	–	SPARE WITH PULL STRING
V1	2"	2	VENDOR CABLE	VENDOR PUMP MOTOR POWER CABLE WITH MOISTURE/THERMAL CABLES. FURNISHED UNDER DIVISION 33, INSTALLED UNDER DIVISION 26
V2	–	1	VENDOR CABLE	VENDOR PUMP MOTOR POWER CABLE WITH MOISTURE/THERMAL CABLES. FURNISHED UNDER DIVISION 33, INSTALLED UNDER DIVISION 26

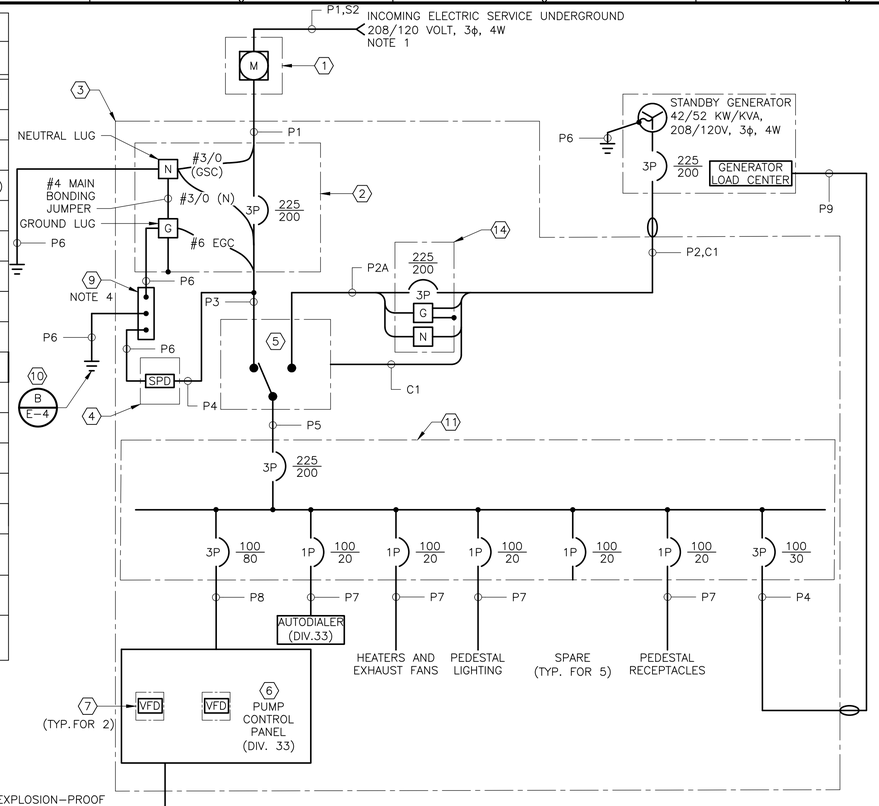

OUTDOOR PAD MOUNTED ELECTRICAL CABINET
ONE LINE DIAGRAM
N.T.S.

NOTES:

1. ALL WORK SHALL CONFORM TO THE LATEST EDITION OF STATE AND LOCAL ELECTRICAL CODES. COMPLY WITH EVERSOURCE STANDARDS.
2. PROVIDE BLACK LAMINATED NAMEPLATES WITH WHITE LETTERING ENGRAVED AS INDICATED ON ELEVATIONS. ALSO PROVIDE YELLOW SIGN READING "WARNING" AND "KEEP OUT – 208/120 VOLTS INSIDE".
3. SIZE AND/OR ARRANGEMENT OF PEDESTAL ENCLOSURE SHALL BE MODIFIED AS NECESSARY TO SUIT EQUIPMENT ACTUALLY FURNISHED.
4. BOND ALL ENCLOSURES LOCATED WITHIN PEDESTAL TO GROUND BUS.
5. PROVIDE RIGID ALUMINUM CONDUIT WITHIN PEDESTAL CABINET.
6. PROVIDE EXPLOSION PROOF SEALS FOR ALL CONDUITS BETWEEN THE PEDESTAL CABINET AND HAZARDOUS LOCATIONS. SEAL OFF FITTINGS INSTALLED ON THE SPARE CONDUITS SHALL BE ACCESSIBLE FOR FUTURE USE OF THE CONDUIT.
7. ALL ELECTRICAL EQUIPMENT SHALL BE RATED TO WITHSTAND SHORT CIRCUIT CURRENT OF 22 KA RMS MINIMUM OR AS SPECIFIED.
8. PROVIDE PANEL SUPPORT WITHIN PEDESTAL CABINET FOR PANELBOARD AND CONTROL PANEL.
9. INTRUSION ALARM TO BE INSTALLED ON ALL DOORS OF ELECTRICAL PEDESTAL CABINET.
10. PROVIDE AND INSTALL 316 STAINLESS STEEL HOOK (SIZED AS REQUIRED) IN WET WELL AND SET HOOK USING ADHESIVE CAPSULE ANCHOR. MANUFACTURER SUBMERSIBLE CABLES SHALL BE SUPPORTED USING STRAIN RELIEF (KELLUM GRIP OR EQUAL).
11. SEE SHEET C–11 FOR SITE PLAN SHOWING EQUIPMENT LOCATIONS AND UNDERGROUND DUCT BANKS.
12. REMOVE ALL COMPRESSIBLE ORGANIC DEPOSITS AND REPLACE WITH STRUCTURAL FILL WITHIN LIMITS SHOWN. EXTEND STRUCTURAL FILL TO 3'–6" BELOW GRADE (MIN.).
13. PROVIDE 3" CLEAR COVER OVER REINFORCING FOR CONCRETE CAST AGAINST SOIL, AND 2" EVERYWHERE ELSE.
14. PROVIDE 3/4" CHAMFER AT EXPOSED CORNERS.
15. MINIMUM CONCRETE STRENGTH AT 28 DAYS: 4,000 psi.
16. DIMENSIONS TO BE COORDINATED BY THE CONTRACTOR W/ APPROVED EQUIPMENT. PEDESTAL SHALL BE INSTALLED 6" (MIN) ABOVE THE 100 YEAR FLOOD PLANE. MAXIMUM PEDESTAL CABINET DIMENSIONS SHALL BE: DEPTH = 3'–0", LENGTH = 6'–6", HEIGHT = 5'–6", UNLESS APPROVED BY ENGINEER.
17. PROVIDE 1–1/2" CRUSHED STONE COVER (3" MIN DEPTH) ON EXPOSED GROUND WITHIN FENCE LINE LIMITS (WHEN PROVIDED).

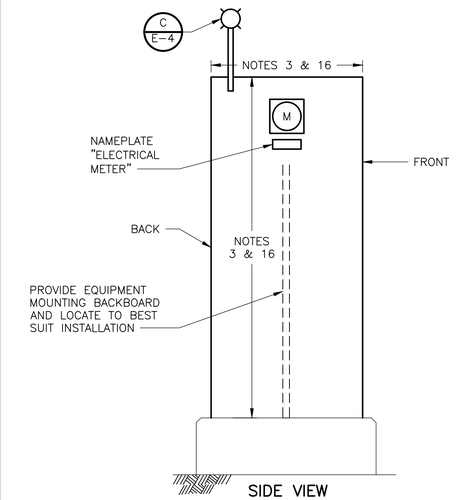

SIDE VIEW
PROFILE
N.T.S.

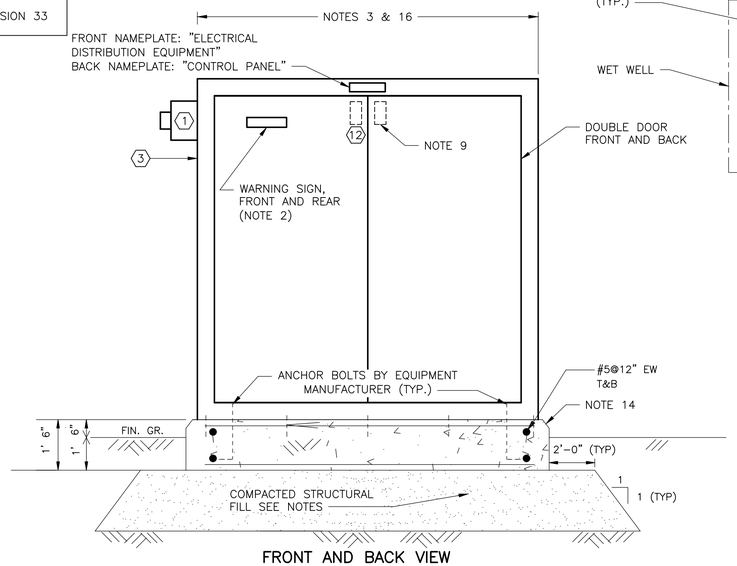

FRONT AND BACK VIEW
PROFILE
N.T.S.

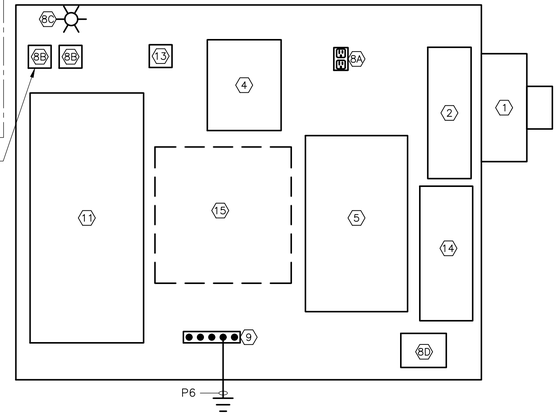

FRONT VIEW – INTERIOR

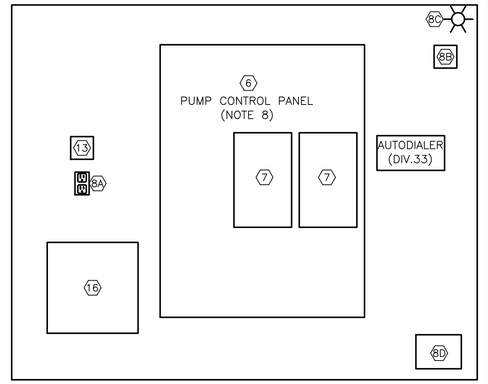

BACK VIEW – INTERIOR

OUTDOOR PAD MOUNTED ELECTRICAL CABINET
ELEVATION
N.T.S.

© 2026 CDM SMITH ALL RIGHTS RESERVED.
REUSE OF DOCUMENTS: THESE DOCUMENTS AND DESIGNS PROVIDED BY PROFESSIONAL SERVICE, INCORPORATED HEREIN, ARE THE PROPERTY OF CDM SMITH AND ARE NOT TO BE USED, IN WHOLE OR PART, FOR ANY OTHER PROJECT WITHOUT THE WRITTEN AUTHORIZATION OF CDM SMITH.

REV. NO.	DATE	DRWN	CHKD	REMARKS

DESIGNED BY: J. BRISCOE REED
DRAWN BY: J. BRISCOE REED
SHEET CHK'D BY: CHARIS–MOLLING
CROSS CHK'D BY: K. WAGNER
APPROVED BY: CHARIS–MOLLING
DATE: APRIL 2026

CDM Smith
101 East River Drive, Suite 1A
East Hartford, CT 06108
Tel: (860) 529-7615

BROOKFIELD, CONNECTICUT

DEAN AND POCONO ROADS
GRAVITY SANITARY SEWER EXTENSION

OVERALL ONE LINE DIAGRAM

STATE OF CONNECTICUT
BETHANY CHARIS–MOLLING
35293
LICENSED PROFESSIONAL ENGINEER

Bethany Charis-Molling
2026.04.28 15:26:32-04'00'

PROJECT NO. 261865–269061
FILE NAME: E003NFOL

SHEET NO.
E-3

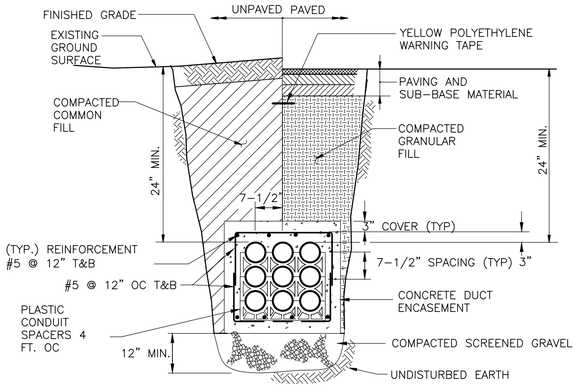

UNDERGROUND DUCT BANK

DETAIL A
N.T.S.

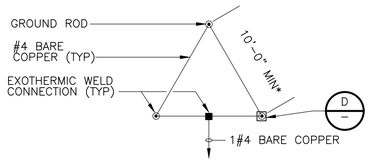

* WHERE PRACTICABLE GROUND RING

DETAIL B
N.T.S.

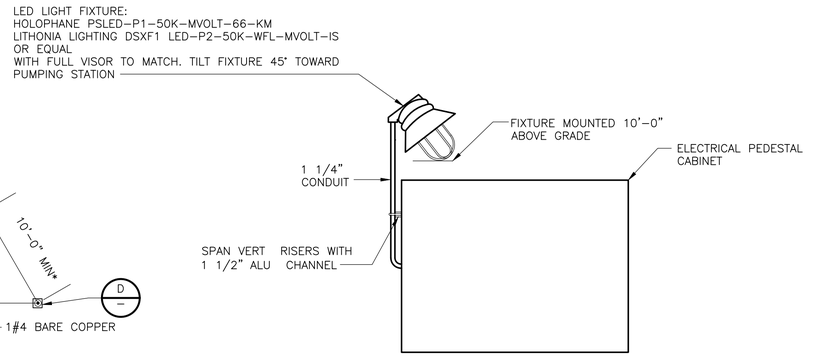

LIGHTING FIXTURE – STANCHION MOUNTED

DETAIL C
N.T.S.

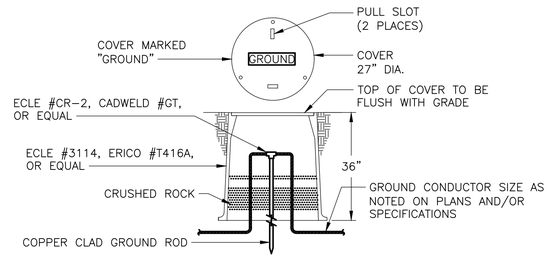

NOTE:

1. TO IMPROVE SYSTEM RESISTANCE, ERICO GEM MAY BE USED AS A BACKFILL MATERIAL IN AN AUGERED HOLE

GROUND ROD TEST WELL

DETAIL D
N.T.S.

ITEM NUMBER	DESCRIPTION	MANUFACTURER	CATALOG NUMBER
1	EXOTHERMIC CONNECTION – CABLE TO GROUND ROD	ECLE CADWELD OR EQUAL	CR-1 TYPE GT OR EQUAL
2	GROUND ROD, COPPER CLAD, 10' X 3/4" DIA.	ECLE ERICO OR EQUAL	GR4 633400 OR EQUAL

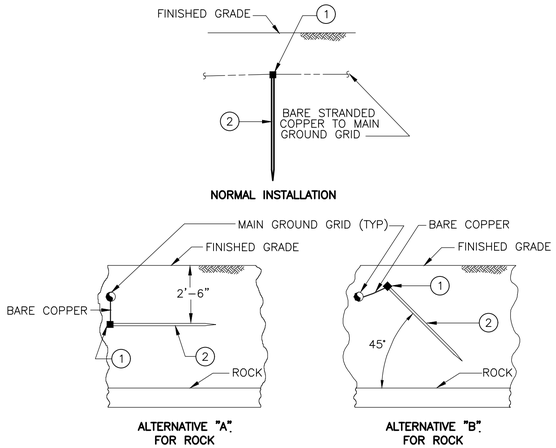

GROUND ROD INSTALLATIONS PER NEC 250-53(A)(4)

DETAIL E
N.T.S.

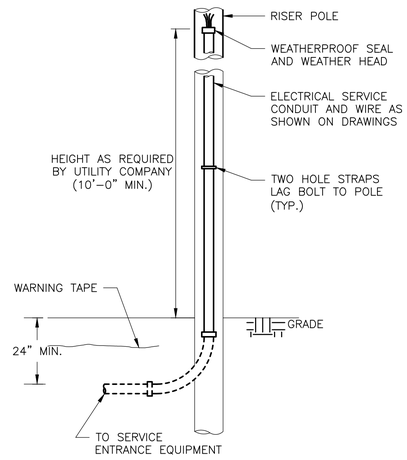

POWER COMPANY RISER POLE

DETAIL F
N.T.S.

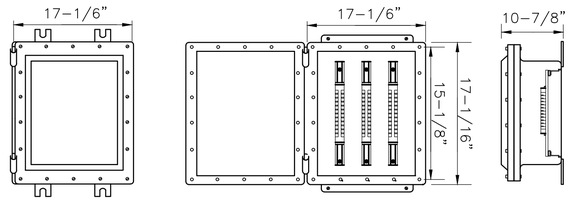

NOTES:

1. PROVIDE AND INSTALL NEMA 7 ENCLOSURE. SIZE SHOWN IS MINIMUM AND SHALL BE INCREASED WHERE NECESSARY PER NEC.
2. MOUNT ENCLOSURE ON 316SS STRUT UNLESS NOTED OTHERWISE.
3. PROVIDE AND INSTALL ENOUGH TERMINALS TO SUPPORT DEVICES SHOWN ON CORRESPONDING SHEETS. PROVIDE SPARE TERMINALS PER DIV 26 SPECIFICATIONS. PROVIDE POWER BLOCKS FOR LARGER CONDUCTOR SETS.
4. UNIQUELY LABEL AND TERMINATE ALL CONDUCTORS.

NEMA 7 JUNCTION BOX

DETAIL G
N.T.S.

© 2026 CDM SMITH ALL RIGHTS RESERVED.
REUSE OF DOCUMENTS: THESE DOCUMENTS AND DESIGNS PROVIDED BY PROFESSIONAL SERVICE, INCORPORATED HEREIN, ARE THE PROPERTY OF CDM SMITH AND ARE NOT TO BE USED, IN WHOLE OR PART, FOR ANY OTHER PROJECT WITHOUT THE WRITTEN AUTHORIZATION OF CDM SMITH.

REV. NO.	DATE	DRWN	CHKD	REMARKS

DESIGNED BY: J. BRISCOE REED
DRAWN BY: J. BRISCOE REED
SHEET CHK'D BY: CHARIS-MOLLING
CROSS CHK'D BY: K. WAGNER
APPROVED BY: CHARIS-MOLLING
DATE: APRIL 2026

CDM Smith
101 East River Drive, Suite 1A
East Hartford, CT 06108
Tel: (860) 529-7615

BROOKFIELD, CONNECTICUT

DEAN AND POCONO ROADS
GRAVITY SANITARY SEWER EXTENSION

ELECTRICAL STANDARD DETAILS I

STATE OF CONNECTICUT – BETHANY CHARIS-MOLLING – 35295 – LICENSED PROFESSIONAL ENGINEER

Bethany Charis-Molling
2026.04.28 15:26:38-04'00'

PROJECT NO. 261865-269061
FILE NAME: E004NFDT

SHEET NO.
E-4

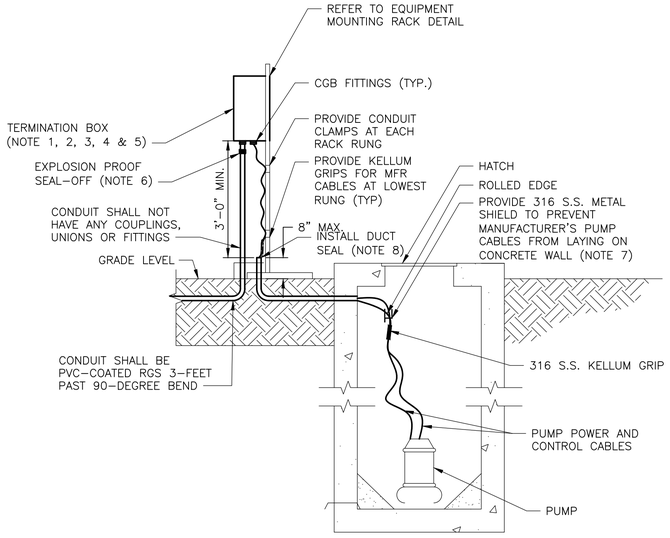

WET WELL/PUMP INSTALLATION

DETAIL H
NTS –

GENERAL NOTES:

1. PUMP CABLE TERMINATION BOX.
2. PROVIDE 600V INSULATED POWER DISTRIBUTION BLOCKS. LUG SIZE AND QUANTITY PER PUMP CABLES. LUGS SHALL BE DESIGNED TO ACCOMMODATE SMALL STRAND FLEXIBLE PUMP CABLES AS WELL AS STANDARD BUILDING WIRE.
3. PROVIDE GLASS POLYESTER INSULATION BARRIER TO COVER ALL EXPOSED LIVE PARTS. PROVIDE "DANGER 208/120 VOLTS" WARNING LABEL.
4. PROVIDE GROUND BAR WITH INDIVIDUAL LUGS FOR EACH (CONDUIT AND CABLE) GROUND WIRE AND BOND TO BOX.
5. ALL MOUNTING HARDWARE SHALL BE TYPE 316 S.S.
6. SEAL-OFFS WITHIN 3-FT OF CLASS I, DIVISION 1 AREAS ARE TO BE FILLED WITH CHICO EXPLOSION PROOF SEALANT. SEAL-OFFS 3-FT OR GREATER ABOVE CLASS I, DIVISION 1 MAY BE FILLED WITH POLYWATER SEALANT.
7. INSTALL CABLES SUCH THAT THEY ARE ACCESSIBLE FROM THE HATCH WITHOUT ENTERING THE WET WELL.
8. CONDUITS TO CLASS I, DIVISION 1 AREAS ARE CONSIDERED VENTS, AND DUCT SEALANT DOES NOT REPLACE NEED FOR EXPLOSION PROOF SEAL-OFFS.
9. PROVIDE JUNCTION BOXES FOR INSTRUMENTATION DEVICES TERMINATIONS AND CABLES AS REQUIRED. COORDINATE WITH P&IDS.

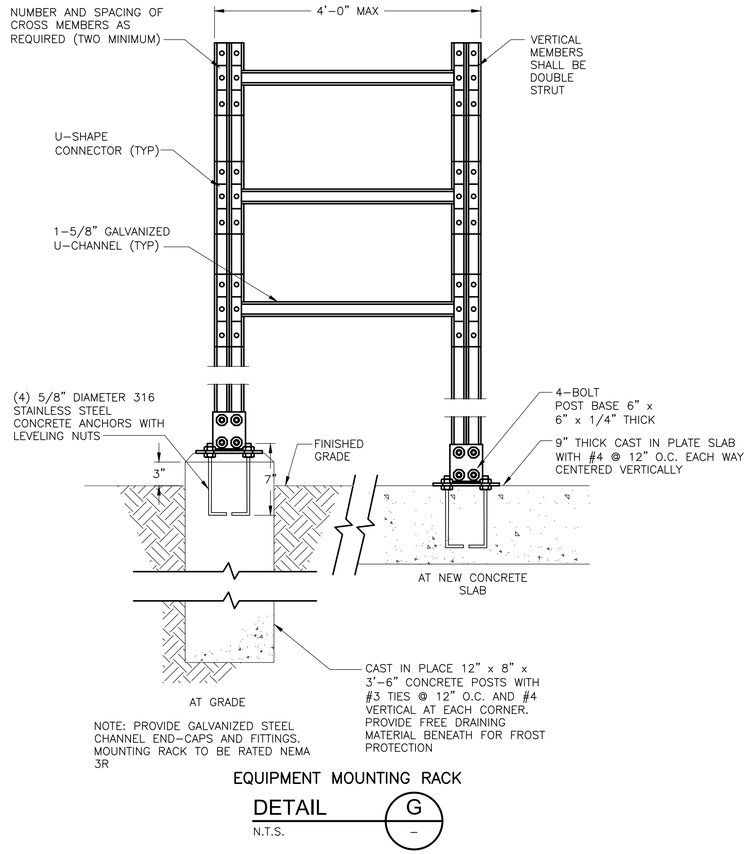

NOTE: PROVIDE GALVANIZED STEEL CHANNEL END-CAPS AND FITTINGS. MOUNTING RACK TO BE RATED NEMA 3R

EQUIPMENT MOUNTING RACK

DETAIL G
N.T.S. –

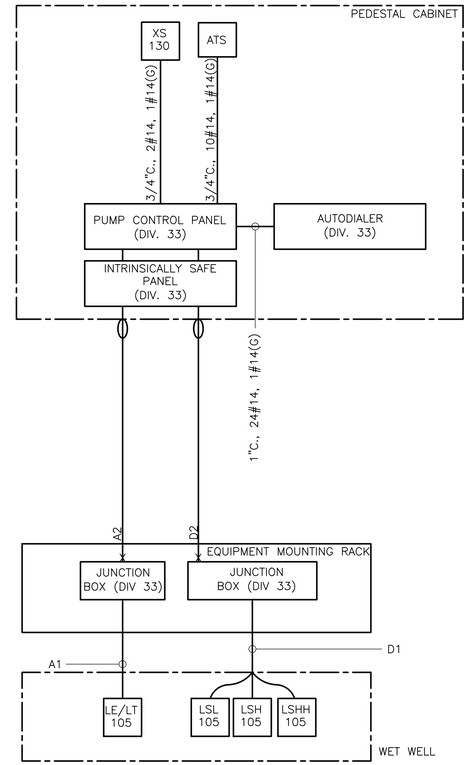

INSTRUMENTATION RISER DIAGRAM

N.T.S.

NOTES:

1. REFER TO WIRING SCHEDULE ON SHEET E-3 FOR CONDUIT AND WIRE REQUIREMENTS.

© 2026 CDM SMITH ALL RIGHTS RESERVED.
REUSE OF DOCUMENTS: THESE DOCUMENTS AND DESIGNS PROVIDED BY PROFESSIONAL SERVICE, INCORPORATED HEREIN, ARE THE PROPERTY OF CDM SMITH AND ARE NOT TO BE USED, IN WHOLE OR PART, FOR ANY OTHER PROJECT WITHOUT THE WRITTEN AUTHORIZATION OF CDM SMITH.

REV. NO.	DATE	DRWN	CHKD	REMARKS

DESIGNED BY: J. BRISCOE REED
DRAWN BY: J. BRISCOE REED
SHEET CHK'D BY: CHARIS-MOLLING
CROSS CHK'D BY: K. WAGNER
APPROVED BY: CHARIS-MOLLING
DATE: APRIL 2026

CDM Smith
101 East River Drive, Suite 1A
East Hartford, CT 06108
Tel: (860) 529-7615

BROOKFIELD, CONNECTICUT

DEAN AND POCONO ROADS
GRAVITY SANITARY SEWER EXTENSION

ELECTRICAL STANDARD DETAILS II

STATE OF CONNECTICUT · BETHANY CHARIS-MOLLING · 35263 · LICENSED PROFESSIONAL ENGINEER

Bethany Charis-Molling
2026.04.28 15:26:45-04'00'

PROJECT NO. 261865-269061
FILE NAME: E005NFDT

SHEET NO.
E-5

GENERAL INSTRUMENT OR FUNCTION SYMBOLS

SHARED DISPLAY/ SHARED CONTROL				
PRIMARY CHOICE	SECONDARY CHOICE	COMPUTER SOFTWARE	DISCRETE	LOCATION AND ACCESSIBILITY
◯	◇	⬡	◯	FIELD MOUNTED AND NORMALLY OPERATOR ACCESSIBLE
◯	◇	⬡	◯	PRIMARY CONTROL PANEL MOUNTED AND NORMALLY OPERATOR ACCESSIBLE
◯	◇	⬡	◯	PRIMARY CONTROL PANEL MOUNTED AND NOT NORMALLY OPERATOR ACCESSIBLE
◯	◇	⬡	◯	SECONDARY CONTROL PANEL MOUNTED AND NORMALLY OPERATOR ACCESSIBLE
◯	◇	⬡	◯	SECONDARY CONTROL PANEL MOUNTED AND NOT NORMALLY OPERATOR ACCESSIBLE

◯ PILOT LIGHT

MISCELLANEOUS SYMBOLS

- (M) MOTOR (CONSTANT SPEED)
- (M) MOTOR (VARIABLE SPEED)
- MCC — INDICATES INTERLOCK OR LOGIC IN A MOTOR CONTROL CENTER
- I — INDICATES GENERAL OR MISCELLANEOUS HARDWIRED INTERLOCK
- MS — MOTOR STARTER
- VFD — VARIABLE FREQUENCY DRIVE
- ISB — INTRINSIC SAFETY BARRIER
- ISR — INTRINSIC SAFETY RELAY

INSTRUMENTATION FUNCTION CODE

	FIRST LETTERS		SUCCEEDING LETTERS		
	COLUMN 1	COLUMN 2	COLUMN 3	COLUMN 4	COLUMN 5
	MEASURED/INITIATING VARIABLE	VARIABLE MODIFIER	READOUT/PASSIVE FUNCTION	OUTPUT/ACTIVE FUNCTION	FUNCTION MODIFIER
A	ANALYSIS		ALARM		
B	BURNER, COMBUSTION		USER'S CHOICE	USER'S CHOICE	USER'S CHOICE
C	USER'S CHOICE			CONTROL	CLOSED
D	USER'S CHOICE	DIFFERENCE, DIFFERENTIAL			DEVIATION
E	VOLTAGE		SENSOR, PRIMARY ELEMENT		
F	FLOW, FLOW RATE	RATIO			
G	USER'S CHOICE		GLASS, GAUGE, VIEWING DEVICE		
H	HAND				HIGH
I	CURRENT		INDICATE		
J	POWER		SCAN		
K	TIME, SCHEDULE	TIME RATE OF CHANGE		CONTROL STATION	
L	LEVEL		LIGHT		LOW
M	MOISTURE				MIDDLE, INTERMEDIATE
N	USER'S CHOICE		USER'S CHOICE	USER'S CHOICE	USER'S CHOICE
O	USER'S CHOICE		ORIFICE, RESTRICTION		OPEN
P	PRESSURE		POINT (TEST CONNECTION)		
Q	QUANTITY	INTEGRATE, TOTALIZE	INTEGRATE, TOTALIZE		
R	RADIATION		RECORD		RUN
S	SPEED, FREQUENCY	SAFETY		SWITCH	STOP
T	TEMPERATURE			TRANSMIT	
U	MULTIVARIABLE		MULTIFUNCTION	MULTIFUNCTION	
V	VIBRATION, MECHANICAL, ANALYSIS			VALVE, DAMPER, LOUVER	
W	WEIGHT, FORCE		WELL, PROBE		
X	UNCLASSIFIED (1)	X-AXIS	ACCESSORY DEVICES, UNCLASSIFIED (1)	UNCLASSIFIED (1)	UNCLASSIFIED (1)
Y	EVENT, STATE, PRESENCE	Y-AXIS		AUXILIARY DEVICES	
Z	POSITION, DIMENSION	Z-AXIS, SAFETY INSTRUMENT SYSTEM		DRIVER, ACTUATOR, UNCLASSIFIED, FINAL CONTROL ELEMENT	

TABLE NOTES:
(1) WHEN USED SYMBOL OR SIGNAL LINE IS ANNOTATED.

INSTRUMENT LINE SYMBOLS

- ELECTRICAL SIGNAL
- TELEPHONE SIGNAL
- ELECTROMAGNETIC OR SONIC SIGNAL (GUIDED)
- ELECTROMAGNETIC OR SONIC SIGNAL (UNGUIDED)
- PNEUMATIC SIGNAL
- CAPILLARY TUBE
- HYDRAULIC SUPPLY
- VENDOR SUPPLIED CABLE
- COMMUNICATION LINK

I/O SIGNALS

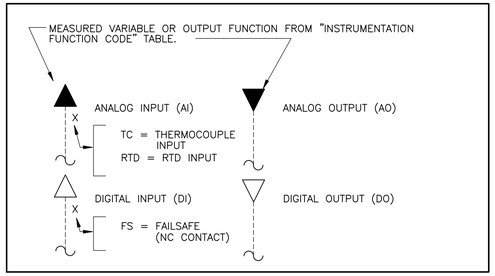

PRIMARY ELEMENTS

- LE/LT — SUBMERSIBLE PRESSURE TRANSDUCER
- PG — PRESSURE GAUGE
- LSX — FLOAT LEVEL SWITCH
  - HH = HIGH HIGH
  - H = HIGH
  - L = LOW
  - LL = LOW LOW

TYPICAL PIPE TAG NUMBERS & DESIGNATION

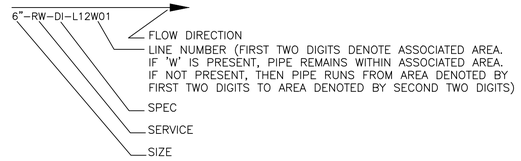

PIPE LINE SYMBOLS

- MAJOR PROCESS LINE
- MINOR PROCESS LINE
- E (S) — ELECTRIC (OR STEAM) TRACING
- PROCESS FLUID / DWG NO. / TO/FROM LOCATION — DRAWING CONTINUATION

GENERAL NOTES

1. THIS LEGEND APPLIES TO P&IDS ONLY AND MAY DIFFER FROM LEGENDS FOR OTHER SHEETS.

2. IN GENERAL THIS LEGEND SHEET AND THE P&IDS ARE BASED ON THE INTERNATIONAL SOCIETY OF AUTOMATION (ISA) STANDARDS FOR PRACTICES FOR INSTRUMENTATION. SOME MODIFICATIONS, ADDITIONS AND ALTERATIONS HAVE BEEN MADE AS REQUIRED TO ACCOMODATE PROJECT REQUIREMENTS.

3. SOME PROCESS ITEMS SUCH AS EQUIPMENT ISOLATION VALVES, BYPASS LINES, ETC., WHICH ARE NOT CRITICAL FOR AN UNDERSTANDING OF THE INSTRUMENTATION FUNCTIONS ARE NOT SHOWN ON THE P&IDS.

4. SEE ELECTRICAL AND MECHANICAL SHEETS AND SPECIFICATIONS FOR ADDITIONAL CONTROL AND INTERLOCK REQUIREMENTS.

5. LIGHTER WEIGHT LINES, SHOWN AS ———— , INDICATE EQUIPMENT, INSTRUMENTS OR PIPING THAT ARE EXISTING. WEIGHTED LINES, SHOWN AS ———— OR HEAVIER ———— , INDICATE EQUIPMENT, INSTRUMENTS OR PIPING THAT ARE NEW. DASHED WEIGHTED LINES, SHOWN AS —·—·—·— , INDICATED EQUIPMENT, INSTRUMENTS OR PIPING THAT ARE GROUPED AS A PACKAGE.

GENERAL ABBREVIATIONS

AI	ANALOG IN
AO	ANALOG OUT
CAT6	CATEGORY 6 UTP CABLE
CPU	CENTRAL PROCESSOR UNIT
DI	DIGITAL OR DISCRETE INPUT
DMU	DIGITAL METERING UNIT
DO	DIGITAL OUTPUT
FC	FAIL CLOSED
FO	FAIL OPEN OR FIBER OPTIC
FOPP	FIBER OPTIC PATCH PANEL
HMI	HUMAN MACHINE INTERFACE
I/O	INPUT/OUTPUT
MCC	MOTOR CONTROL CENTER
MES	MANAGED ETHERNET SWITCH
MOV	MOTORIZED VALVE
NAS	NETWORK ATTACHED STORAGE
NC	NORMALLY CLOSED
NPW	NON-POTABLE WATER
NO	NORMALLY OPEN
OIT	OPERATOR INTERFACE TERMINAL
PLC	PROGRAMMABLE LOGIC CONTROLLER
PS	PUMP STATION
PW	PLANT WATER
RIO	REMOTE INPUT/OUTPUT
TC	THIN CLIENT
UPS	UNINTERRUPTIBLE POWER SUPPLY
USB	UNIVERSAL SERIAL BUS
VFD	VARIABLE FREQUENCY DRIVE

PIPE SERVICE IDENTIFICATION

EFF	EFFLUENT
DR	DRAIN
FA	FOUL AIR
FLT	FILTRATE
INF	INFLUENT
LPA	LOW PRESSURE AIR
OVF	OVERFLOW
P	PROTECTED WATER
PS	PRIMARY SOURCE
PW	PLANT WATER
SC	SCUM
SE	SECONDARY EFFLUENT
SEPT	SEPTAGE
TKD	TANK DRAINAGE
V	VENT
WW	WASHWATER

TYPICAL TAG NUMBERS & DESIGNATION

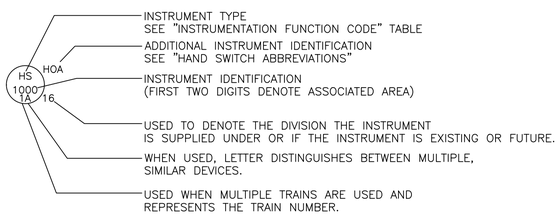

HAND SWITCH ABBREVIATIONS

LOR = LOCAL/OFF/REMOTE	LA = LOCAL/AUTO
LR = LOCAL/REMOTE	E-STOP = EMERGENCY STOP
OO = ON/OFF	OOA = ON/OFF/AUTO
OSC = OPEN/STOP/CLOSE	HOA = HAND/OFF/AUTO
LLS = LEAD/LAG/STANDBY	SS = START/STOP
SOR = START/OFF/RESET	

ELECTRICAL / AIR SOURCES

- UPS — UPS POWERED ELECTRICAL SOURCE FROM PLC PANEL IN WHICH INSTRUMENT SIGNAL IS WIRED TO
- ES — ELECTRICAL SOURCE
- IA — INSTRUMENT AIR SOURCE

VALVE ACTUATORS

- (M) — ROTARY MOTOR. (SHOWN TYPICALLY WITH ELECTRIC SIGNAL. MAY BE HYDRAULIC OR PNEUMATIC)
- S — SOLENOID
- E/H — ELECTROHYDRAULIC
- CYLINDER, SINGLE-ACTING, SPRING OPPOSED WITHOUT POSITIONER OR PILOT.

VALVE SYMBOLS

- VALVE (GV)
- BALL VALVE (BV)
- PLUG VALVE (PV)
- FLAP VALVE (FV)
- BUTTERFLY VALVE (BFV)
- SWING CHECK VALVE (CV)

TYPICAL EQUIPMENT TAG NUMBERS & DESIGNATION

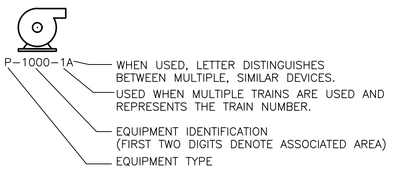

PROCESS EQUIPMENT

PARTIAL LIST
ADDITIONAL SYMBOLS MAY BE SHOWN ON THE FLOW DIAGRAMS

SUBMERSIBLE PUMP

PIPE SPECIFICATION IDENTIFICATION

CS	CARBON STEEL
CU	COPPER
DI	DUCTILE IRON
FRP	FIBERGLASS REINFORCED PLASTIC
GS	GALVANIZED STEEL
HDPE	HIGH-DENSITY POLYETHYLENE
PVC(SCH 40)	POLYVINYL CHLORIDE SCHEDULE 40
PVC(SCH 80)	POLYVINYL CHLORIDE SCHEDULE 80
RC	REINFORCED CONCRETE
SS	STAINLESS STEEL

STATE OF CONNECTICUT · ERIC J. SILVERMAN · No. PEN. 22107 · LICENSED PROFESSIONAL ENGINEER

Digitally signed by Eric J Silverman
Date: 2026.04.28 14:33:01-04'00'

REV. NO.	DATE	DRWN	CHKD	REMARKS

DESIGNED BY: M. WRIGHT
DRAWN BY: M. WRIGHT
SHEET CHK'D BY: x
CROSS CHK'D BY: x
APPROVED BY: E. SILVERMAN
DATE: APRIL 2026

CDM Smith
101 East River Drive, Suite 1A
East Hartford, CT 06108
Tel: (860) 529-7615

BROOKFIELD, CONNECTICUT

DEAN AND POCONO ROADS
GRAVITY SANITARY SEWER EXTENSION

INSTRUMENTATION LEGEND

PROJECT NO. 261865-269061
FILE NAME: I001SYMB.dwg

SHEET NO.
I-1

XREFs: [CDMS_2436] Images: []
Last saved by: MURPHYDP Time: 3/12/2025 8:40:10 PM
C:\pw_pl1\murphydp\d4088103\I001PID.dwg
© 2026 CDM SMITH ALL RIGHTS RESERVED.
REUSE OF DOCUMENTS: THESE DOCUMENTS AND DESIGNS PROVIDED BY PROFESSIONAL SERVICE, INCORPORATED HEREIN, ARE THE PROPERTY OF CDM SMITH AND ARE NOT TO BE USED, IN WHOLE OR PART, FOR ANY OTHER PROJECT WITHOUT THE WRITTEN AUTHORIZATION OF CDM SMITH.

XREFs: [CDMS_2436] Images: []
Last saved by: MURPHYDR Time: 3/12/2025 8:40:10 PM
C:\pw_pit\murphydr\d0088105\I002PIDI.dwg
© 2026 CDM SMITH ALL RIGHTS RESERVED
REUSE OF DOCUMENTS: THESE DOCUMENTS AND DESIGNS PROVIDED BY PROFESSIONAL SERVICE, INCORPORATED HEREIN, ARE THE PROPERTY OF CDM SMITH AND ARE NOT TO BE USED, IN WHOLE OR PART, FOR ANY OTHER PROJECT WITHOUT THE WRITTEN AUTHORIZATION OF CDM SMITH.

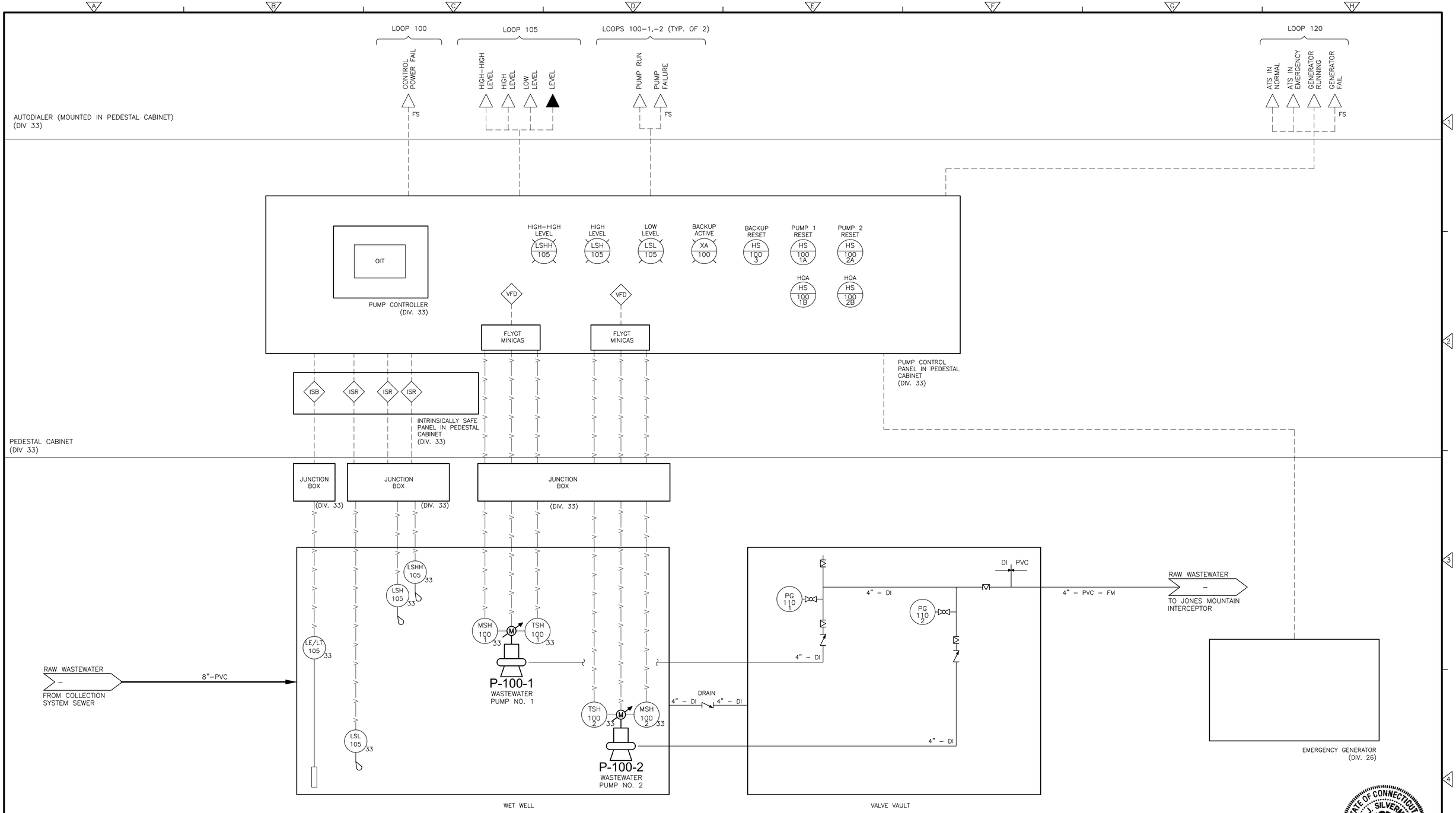



Digitally signed by Eric J Silverman
Date: 2026.04.28 14:33:17-04'00'

REV. NO.	DATE	DRWN	CHKD	REMARKS

DESIGNED BY: M. WRIGHT
DRAWN BY: M. WRIGHT
SHEET CHK'D BY: x
CROSS CHK'D BY: x
APPROVED BY: E. SILVERMAN
DATE: APRIL 2026

CDM Smith
101 East River Drive, Suite 1A
East Hartford, CT 06108
Tel: (860) 529-7615

BROOKFIELD, CONNECTICUT

DEAN AND POCONO ROADS GRAVITY SANITARY SEWER EXTENSION

PUMPING STATION P&ID

PROJECT NO. 261865–269061
FILE NAME: I002PIDI.dwg

SHEET NO.
I-2

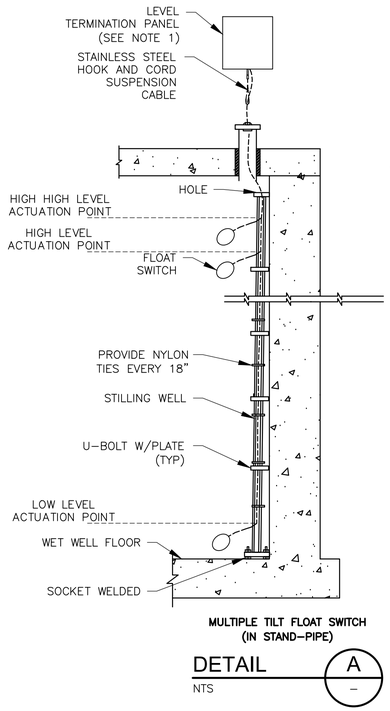

NOTES:

1. PROVIDE 15" X 15" MINIMUM SIZED FLOAT TERMINATION PANEL. PROVIDE J-HOOK INSIDE PANEL TO COIL EXTRA CABLE. PROVIDE TERMINATION BLOCKS. ALL CABLES AND WIRES SHALL BE LABELED.
2. PROVIDE 1/2" VENT HOLES IN TWO ROWS, 180° APART, EACH FOOT FROM TOP TO BOTTOM OF STILLING WELL.
3. REFER TO DRAWING M-1 FOR DETAILS.

MULTIPLE TILT FLOAT SWITCH (IN STAND-PIPE)

DETAIL A
NTS

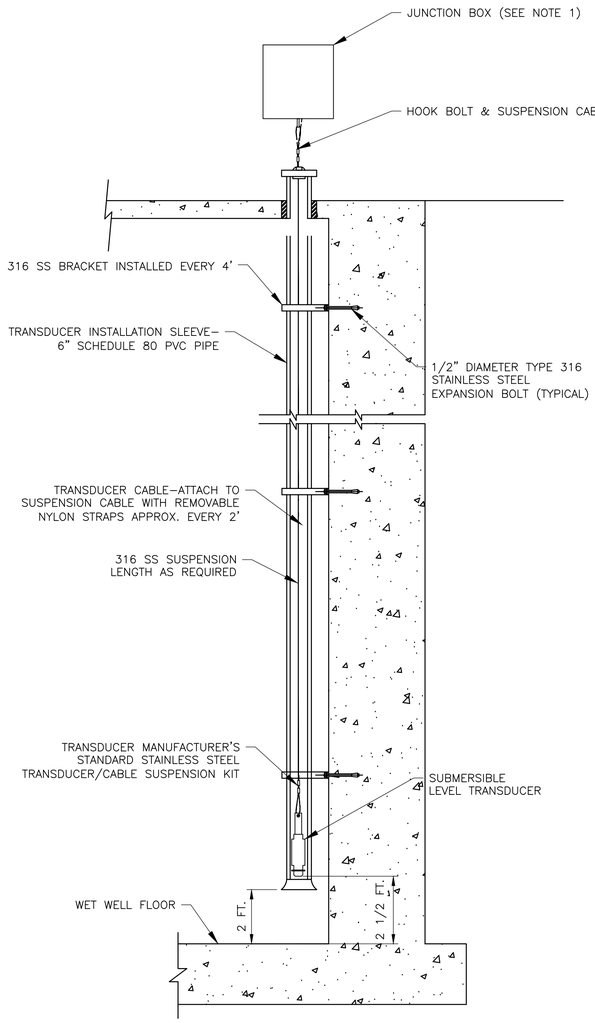

NOTES:

1. PROVIDE 15" X 15" MINIMUM TERMINATION PANEL. PROVIDE J-HOOK INSIDE PANEL TO COIL EXTRA CABLE. PROVIDE TERMINATION BLOCKS. ALL CABLES AND WIRES SHALL BE LABELED. PROVIDE A VENT TUBE OR ANEROID BELLOWS FOR THE SUBMERSIBLE LEVEL TRANSDUCER.
2. REFER TO DRAWING M-1 FOR DETAILS.

SUBMERSIBLE LEVEL SENSOR

DETAIL B
NTS

XREFs: [CDMS_2436] Images: []
Last saved by: MURPHYDR Time: 3/12/2025 8:40:10 PM
C:\Upw_pi1\murphydr\d4088105\I001PID.dwg
©2026 CDM SMITH ALL RIGHTS RESERVED.
REUSE OF DOCUMENTS: THESE DOCUMENTS AND DESIGNS PROVIDED BY PROFESSIONAL SERVICE, INCORPORATED HEREIN, ARE THE PROPERTY OF CDM SMITH AND ARE NOT TO BE USED, IN WHOLE OR PART, FOR ANY OTHER PROJECT WITHOUT THE WRITTEN AUTHORIZATION OF CDM SMITH.

REV. NO.	DATE	DRWN	CHKD	REMARKS

DESIGNED BY: M. WRIGHT
DRAWN BY: M. WRIGHT
SHEET CHK'D BY: x
CROSS CHK'D BY: x
APPROVED BY: E. SILVERMAN
DATE: APRIL 2026

CDM Smith
101 East River Drive, Suite 1A
East Hartford, CT 06108
Tel: (860) 529-7615

BROOKFIELD, CONNECTICUT

DEAN AND POCONO ROADS
GRAVITY SANITARY SEWER EXTENSION

INSTALLATION DETAILS

PROJECT NO. 261865-269061
FILE NAME: I003GDDT.dwg

SHEET NO.
I-3



Digitally signed by Eric J Silverman
Date: 2026.04.28 14:33:30-04'00'